SANLI

GENUINE SPARE PARTS

SPARE PARTS CATALOGUE

CONTENTS

Product	Page
LawnBeetle LBP350	3
LazerCut LCS400	4
PowerCut PCS400	6
PowerMulch PMS400	6
PowerMulch PMS550	6
Mower Engines OHV350 (Used on Lawnbeetle), OHV400 (Used on LazerCut, PowerCut, and PowerMulch)	8
Mower Engine OHV550 (Used on PowerMulch 550)	10
Brushcutter BCB260 Bent Shaft	12
Brushcutter BCS260 Straight Shaft	14
Pole Saw and Chain Saw Attachment SPS260	16
Pole Saw Hedgetrimmer Attachment SPS260	18
26cc 2-Stroke Engine (Brushcutters, Pole Saw)	20
Outdoor Blower SLB260	22
Blower Vac SLBV260	24
26cc 2-Stroke Engine (Blower/Vac)	26
Hedgetrimmer SLHT600	28
26cc 2-Stroke Engine (SLHT600)	30

SANLI GENUINE SPARE PARTS

LawnBeetle LBP350

Item	Part No	Description	Qty
1	SL40T12001	OHV350 Engine	1
2	SL40T-AO1101	Cutting Deck	1
3	SL40T07100	Wheel & Hubcap / Front & Rear	4
4	SL40T05108	Throttle Cable	1
5	SL40T04103	Rear Flap	1
6	SL40T04102	Grass Catcher Frame	1
7	SL40T04107	Cable Tie	2
8	SL40T-AO5105	Lower Handle	2
9	SL40T05103	Upper Handle	1
10	SL40T05104	Throttle Control Lever	1
11	SL046TX2A-05006	Handle Toggle	2
12	SL40T04101	Grass Catcher Bag	1
13	SL40T04105	Rear Flap Spring	1
14	SL40T04104	Rear Flap Axle	1
15	SL40T04106	Rear Flap Axle Circlip	2
16	SL40T-AO7207	Height Adjustment Plate - Left	2
17	SL40T07204	Wheel Bolt - Left	2
18	SL40T-AO7208	Height Adjustment Plate - Right	2
19	SL40T07205	Wheel Bolt - Right	2
20	SL40T02107	Woodruff Key	1
21	SL40T02105	Blade Boss	1
22	LBP-CB1	Cutting Blade	1
23	GB1972-80	Blade Washer	1
24	GB/T5781-2000	Blade Bolt	1
25	GB5787	Lock Nut	2
26	GB/T6177.1-2000	Bolt	2

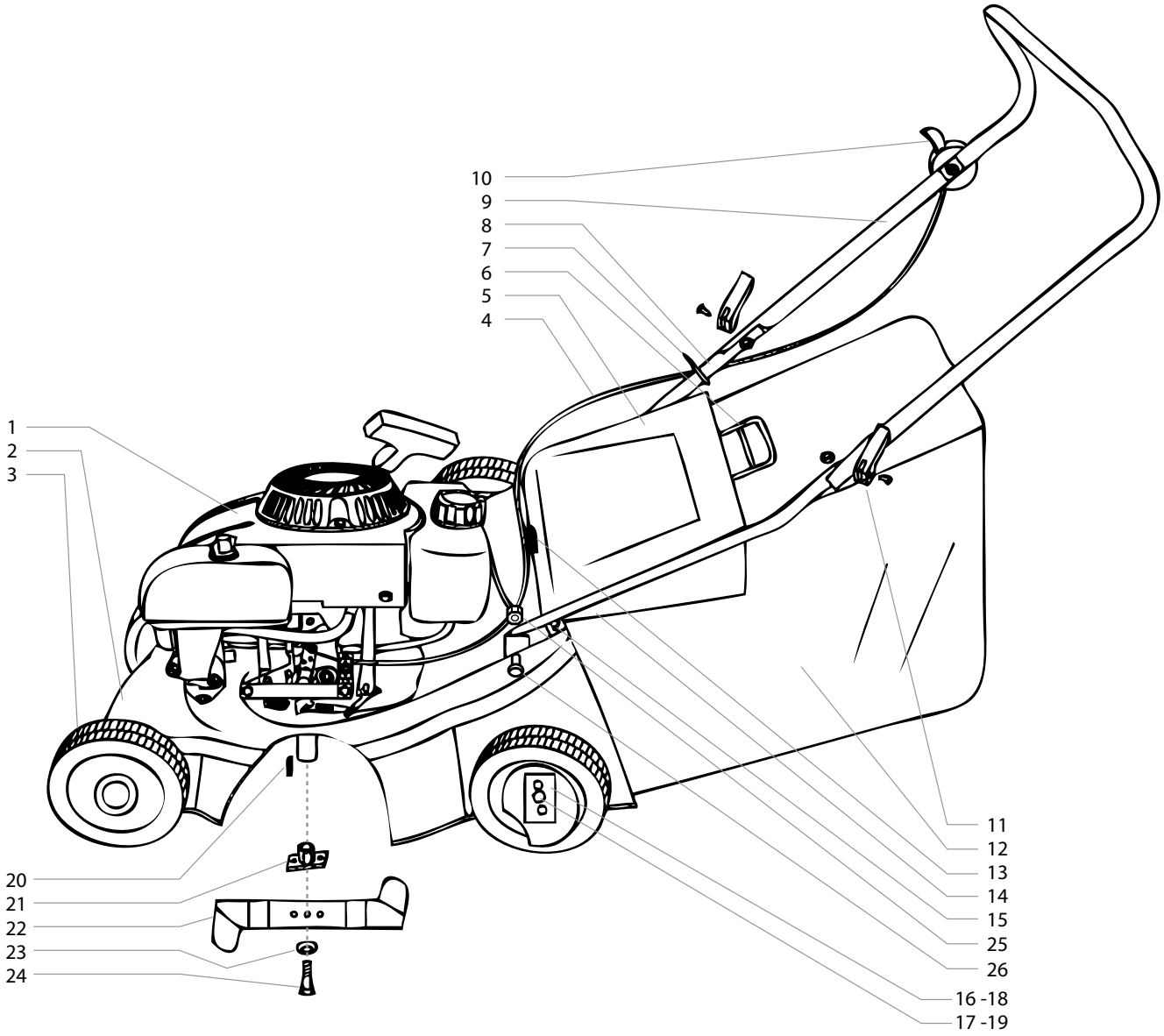

LazerCut LCS400

Item	Part No.	Description	Qty
1	SL46T4-12001	Engine	1
2	SL42T-01001	Deck	1
3	SL42T-01102	Front Skirt	1
4	GB/T12618-1990	Rivet 5X10	7
5	SL42T-07306	Axle Clip	2
6	SL42T-07107	Rear Axle Bush	2
7	SL46-5T07102	Rear Wheel Hub Cap	2
8	SL46-5T07010	Rear Wheel	2
9	SL42T-03012	Height Adjuster Lever	1
10	SL42T-07303	Rear Axle Shield	1
11	SL40T-A05050	Handle Toggle	2
12	SL42T-05102	Lower Handle	1
13	SL42T-05101	Upper Handle	1
14	GB5789-1986	Bolt M6X45	1
15	**SL42T-05010**	**Throttle Lever Assembly**	**1**
16	GB/T6177.1-2000	Nut M6	1
17	SL42T-05040	Throttle Cable	1
18	SL42T-05107	Cable Retainer	1
19	GB/T6177.1-2000	Nut M8	2
20	SL42T-07103	Dust-proof Cover	4
21	SL42T-04105	Left Handle-mounting Plate	1
22	SL42T-04106	Right Handle-mounting Plate	1
23	GB5789-1986	Bolt M8X18	4
24	GB/T6177	Nut M8	4
27	SL42T-07105	Axle Circlip	4
28	SL42T-03010	Linkage	1
29	SL42T-03103	Extension Spring	1
30	GB/91-2000	Split Pins 2x20	2
31	SL42T-07020	Front Axle	1
32	GB/T1096-1979	Key 4.8X5.5X31	1
33	SL46T02101	Blade Boss	1
34	SL42T-02104	Blade Boss Spring Washer	4
35	SL42T-02101	Cutting Blade	4
36	SL42T-02102	Blade Bolt	4

Item	Part No.	Description	Qty
37	SL42T-02103	Blade Disc	1
38	GB/T962-2002	Flat Washer	1
39	GB93-1987	Spring Washer	1
40	SL40T-A02102	Blade Disc Bolt	1
41	GB/T61831-2000	Nut M8	4
42	**SL42T-04010**	**Grass Catcher Assembly**	**1**
43	SL42T-04014	Rear Flap	1
44	SL42T-07030	Rear Axle	1
45	SL42T-04104	Rear Flap Axle	1
46	SL46-5Z04107	Rear Flap Spring	1
48	GB/T9074.17	Engine Mount Bolt M8X32	3
51	SL42T-05108	Remote Starter Eye	1
52	GB/T962-2002	Washer 10.5x30x3	2
53	SL42T-07010	Front Wheel	2
54	SL42T-07102	Front Wheel Hub Cap	2
55	SL42T-07108	Front Axle Bush	2
56	SL42T-09005	Sanli Nose Badge	1
57	SL42T-01103	Height Adjustment Segment	1
58	PSS-LB1	Cutting Blade/Bolt Washer/Nut	4
60	SL42T-10001	Spark Plug Socket	1
61	SL40T-A10003	Spark Plug Socket Rod	1
62	SL42Z-10101	Universal Spanner	1
63	SL42T-17	Catcher Top Cover	1
64	SL46-5T07303-1	Rear Axle Shield Bolt & Nut Assy	2

SANLI GENUINE SPARE PARTS

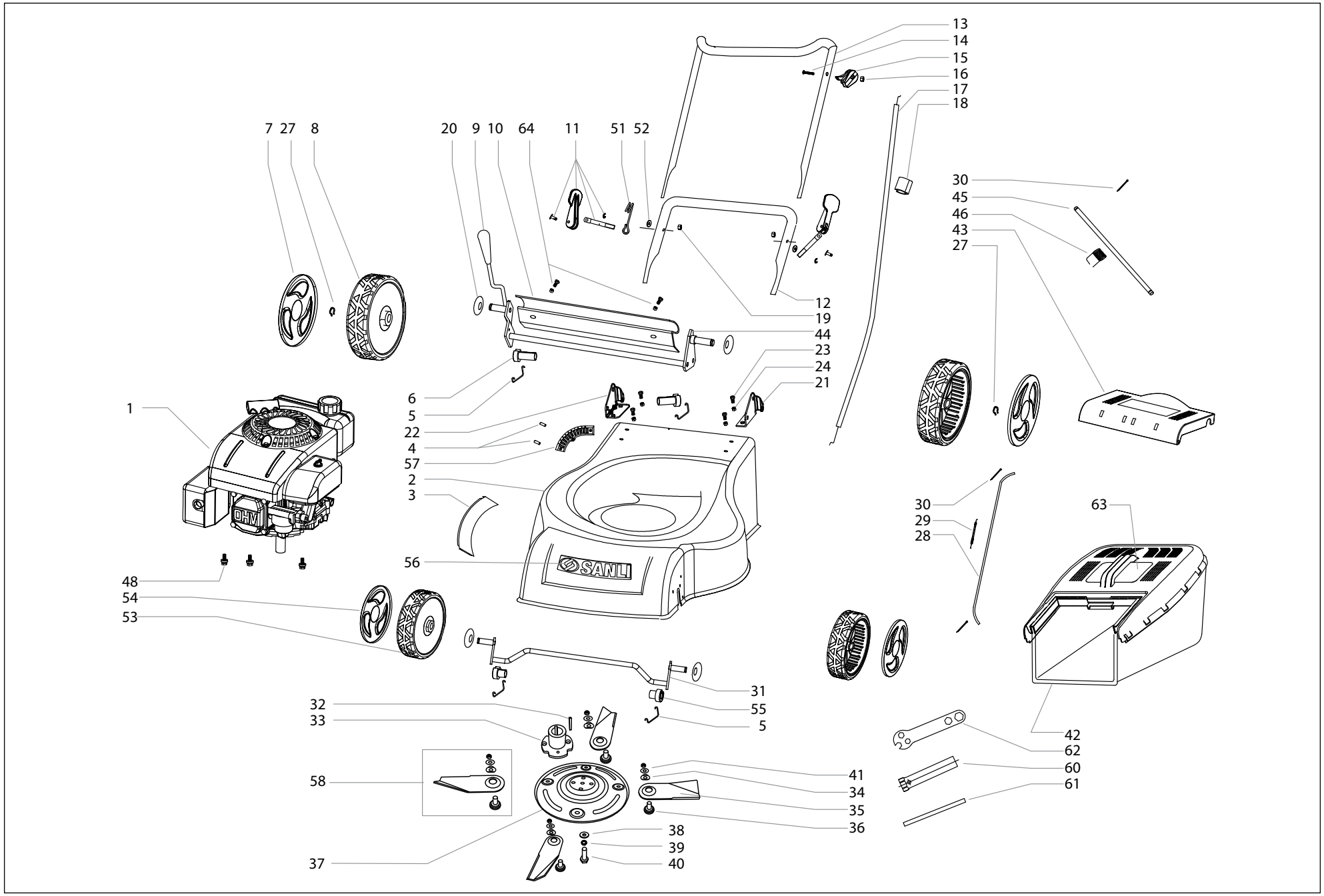
13
14
15
16
17
18
7 27 8
20 9 10 64 11 51 52
30
45
46
43
27
12
19
44
23
24
21
6
5
22
4
57
2
3
1
56
SANLI
OHV
48
54
53
30
29
28
63
31
55
5
32
33
58
41
34
35
36
38
39
40
37
42
62
60
61

PowerCut PCS400, PowerMulch PMS400 and PowerMulch PMS550

Item	Part No	Description	Qty
1	SL46T4-12001	OHV400 Engine	1
2	SL46-5T07001	Rear Axle Assemly	1
4	SL046T4-A12103	Washer	3
5	GB/T5788-1986	Bolt	3
6	SL46-5T01101	Mower Chassis	1
7	SL46T4-01102	Height Adjust Segment	1
8	GB/TI2618-1990	Rivet	7
9	SL46T4-07102	Axle Clip	2
10	SL46T-B07210	Rear Axle Bush	2
11	SL46T4-07105	Hubcap	4
12	SL46T4-07010	Wheel	4
13	SL46-5T03001	Height Adjuster Lever	1
14	SL46-5T07303	Rear Shield	1
15	SL46T-A04102	Handle Mounting Plate - Right	1
16	SL46T-A04103	Handle Mounting Plate - Left	1
17	GB5789-1986	Mounting Plate Bolt	4
18	GB/T6177	Mounting Plate Nut	4
19	SL46T-A07210	Front Axle Bush	2
20	GB/T276-94	Wheel Bearing	4
21	SL46T4-07113	Axle Circlip	4
22	SL46-5T03010	Linkage	1
23	SL46T-B03103	Linkage Spring	1
24	GB/T896-1986	Linkage Circlip	1
25	**SL46-5T07002**	**Front Axle Assembly**	**1**
26	SPSNB01	Sanli Nose Badge	1
27	SL46-5T01102	Front Skirt	1
28	SL40T05030	Handle Knob	
29	SL46-5T05101	Lower Loop Handle	1
30	SL46T-A05101	Top Handle	1
31	GB5789-1986	Throttle Assembly Bolt	1
32	SL46-5T05010	Throttle Control Lever	1
33	GB/T6177	Throttle Assembly Nut	1
34	SL46T-A05030	Throttle Cable	1

Item	Part No	Description	Qty
35	SPSCR01	Cable Retainer	1
36	SL40T05102	Handle Knob Bolt	2
37	SL4060-DPC	Dust-proof Cap	1
38	**SL46-5T04010**	**Grass Catcher Assembly**	**1**
39	SL46-5T04102	Rear Flap	1
40	GB/T896-1986	Circlip	2
41	SL46T-A04105	Rear Flap Axle	1
42	SL46-5T04107	Rear Flap Spring	1
43	GB/TI096-1979	Woodruff Key	1
44	SL46T02101	Blade Boss	1
45	PSS-LB1	Cutting Blade/Bolt Washer/Nut	4
46	SL46-5T02103	Blade Disc	1
47	GB/T962-2002	Blade Disc Bolt Spring Washer	1
48	GB93-1987	Blade Disc Bolt Lower Washer	1
49	SL46T-A06102	Blade Disc Bolt	1
50	SL46-5T04108	Mulch Plug	1
51	SL46-5T07303-1	Rear Axle Shield Bolt & Nut Assy	2

SANLI GENUINE SPARE PARTS

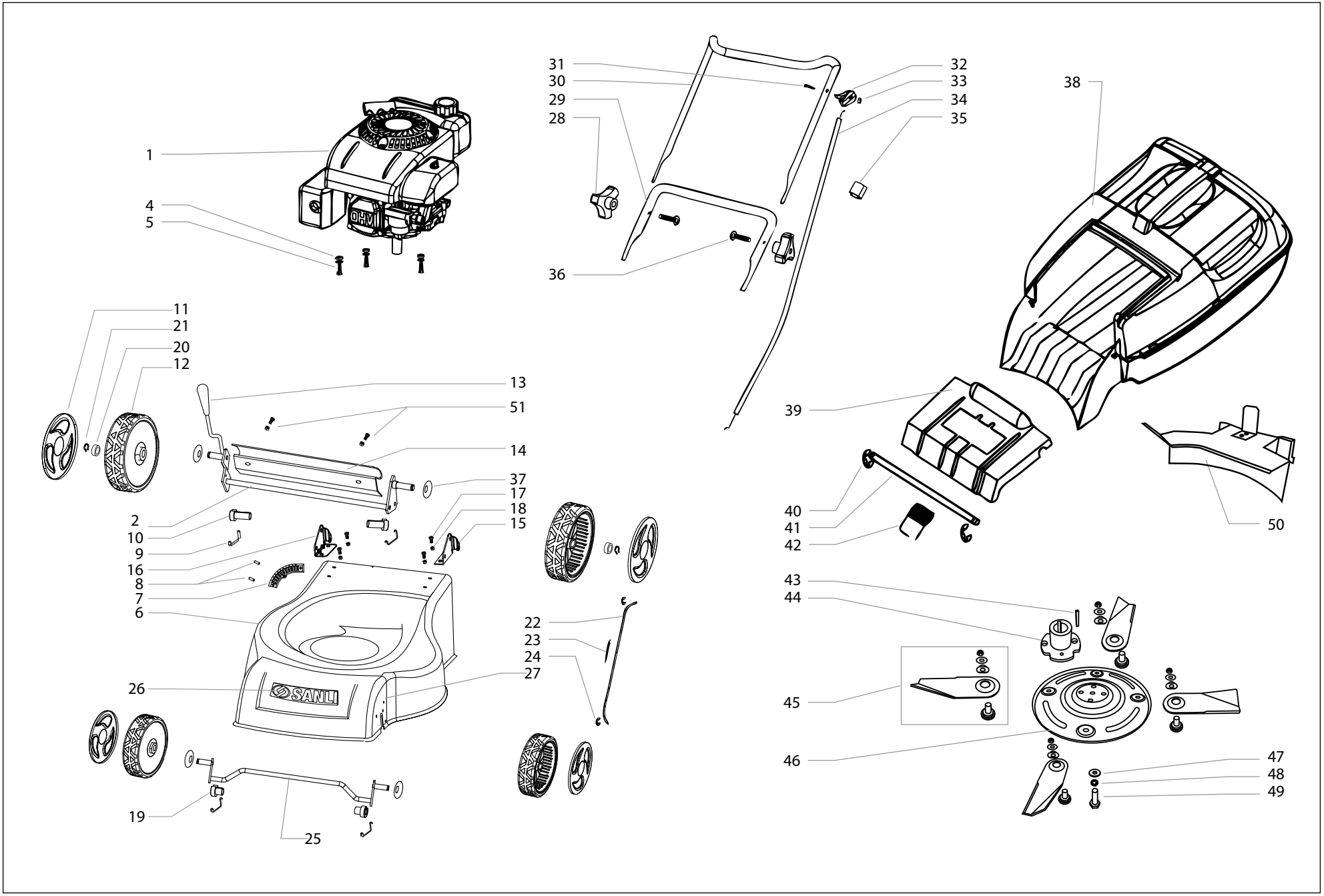

Model No: PCS400,PMS400
PMS550

OHV350, Engine Used on Lawnbeetle OHV400, Engine Used on LazerCut, PowerCut and PowerMulch

Item	Part No	Description	Qty
Throttle linkage and governor plate			
1	B02011	Stop Wire	1
2	B02012	Ground Wire	1
3	1P60-000001	Stop Switch	1
4	B00013	Stop Switch Screw	1
5	1P60-000011	Return Spring	1
6	1P60-140004	Governor Linkage Spring	1
7	B02013	Governor Linkage	2
8	B00014	Governor Plate Screw	2
9	1P60-140000	Governor Plate	1
9a	1P60-140009	Governor Return Spring	1
10	1P60-140003	Throttle Linkage	1
11	B02025	Throttle Cable Clamp	1
12	B00015	Screw	1
13	B00016	Screw Assembly	1
14	1P60-000012	Governor Spring	1
15	1P60-140001	Governor Arm	1
16	B00017	Screw	1
17	B01004	Nut	1
18	B00018	Cover Screw	3
19	B02014	Governor Cover	1
Cylinder head and valve assembly			
20	B00002	Rocker Cover Lock Bolt	4
21	1P60-030002	Rocker Cover	1
22	1P60-050013	Rocker Cover Gasket	1
23	1P60-050008	Retaining Spring Plate	2
24	1P60-050012	Valve Spring Retaining	2
25	1P60-050005	Valve Intake	1
26	1P60-050006	Valve Exhaust	1
27	B01001	Rocker Arm Locknut	2
28	B01002	Rocker Arm Nut	2
29	1P60-050010	Rocker Arm	2
30	1P60-050009	Push Rod Guide	1
31	B00003	Rocker Stud Bolt	2
32	1P60-050002	Push Rod	1
33	1P60-050100	Cylinder Head	1

Item	Part No	Description	Qty
34	B00004	Cylinder Bolt	4
35	B00005	Cam Follower	2
36	1P60-050007	Spark Plug and Gasket	1
37	B00006	Carburettor Stud Bolt	2
Blower housing, flywheel and ignition coil assembly			
38	B00021	Starter Housing Bolt	4
39	B02018	Washer	4
40	1P60-110000	Starter Housing	1
41	B00022	Blower Housing Bolt	2
42	1P60-000008	Blower Housing	2
43	B00023	Blower Housing Screw	1
44	B01006	Flywheel Lock Nut	1
45	1P60-000007	Starter Cup	1
46	1P60-000006	Fan	1
47	B00024	Screw	2
48	B02019	Ignition Coil	1
48a	B02019A	Spark Plug Boot	1
49	1P60-090000	Flywheel	1
50	1P60-110002	Starter Handle	1
51	1P60-110003	Starter Rope	1
Muffler and heat shield			
52	1P60-010011	Stud Bolt	2
53	1P60-080001	Muffler Cover	1
54	1P60-000003	Heat Shield	1
55	1P60-080000	Muffler	1
56	B01005	Nut	2
57	1P60-010005	Top Oil Seal	1
58	B00001	Strainer Cover Bolt	2
59	1P60-010013	Strainer Engine Oil Cover Gasket	1
60	1P60-010009	Strainer Engine Oil	1
61	1P60-010008	Engine Oil Filter Valve	2
62	1P60-010001	Cylinder	1
63	1P60-010006	Limited Speed Shaft Oil Seal	1
64	1P60-010002	Crankcase Pin	1
65	1P60-000014	Sump Gasket	1
66	1P60-050003	Head Gasket for OHV350	1

Item	Part No	Description	Qty
66	1P64-050003	Head Gasket for OHV400	1
67	1P60-010003	Governor Shaft	1
68	B02001	Governor Shaft Clip (Inner)	1
69	1P60-010007	Engine Oil Pick Up	1
70	1P60-020008	Governor Shaft Clip (Outer)	1
71	1P64-060001	Packing Gasket ‘D’ shape	1
71	1P60-060003	Packing Gasket ‘O’ shape	1
72	1P60-060001	Gasket	1
73	1P60-060000	Carburettor for OHV350	1
73	1P64-060000	Carburettor for OHV400	1
74	1P60-060002	Adiabatic Pad / Packing	1
75	B00012	Air Filter Cover Screw	1
76	1P60-070000	Air Filter Cover & Base	1
77	1P60-070001	Breather Tube	1
78	1P60-070002	Clip	1
79	B01003	Air Filter Lock Nut	2
80	1P60-070003	Air Filter Element	1
81	B02002	Top Piston Ring for OHV350	1
81	B03002	Top Piston Ring for OHV400	1
82	B02003	2nd Piston Ring for OHV350	1
82	B03003	2nd Piston Ring for OHV400	1
83	B02004	Bush Ring for OHV350	1
83	B03004	Bush Ring for OHV400	1
84	B02005	Oil Ring for OHV350	1
84	B03005	Oil Ring for OHV400	1
85	1P60-030007	Gudgeon Pin Clip	2
86	1P60-030003	Gudgeon Pin	1
87	1P60-030001	Piston	1
88	1P60-030005	Con Rod	1
89	B00007	Big End Cap Bolt	1
90	1P60-030006	Big End Cap	1
91	1P60-030004	Crank	1
92	B02006	Woodruff Key	1
93	1P60-010004	Bearing	1
94	1P60-040000	Camshaft Assembly	1
95	B02015	Plate	1

Item	Part No	Description	Qty
96	B00019	Screw	2
97	1P60-120001	Tank	1
98	1P60-120003	Packing	1
99	B02016	Breather	1
100	1P60-120002	Tank Cap	1
101	1P60-120005	Rubber Grommet	2
102	B02017	Washer	1
103	B00020	Screw	1
104	1P60-000010	Hose Clip	2
105	1P60-120004	Fuel Hose	1
106	B02022	Fuel Filter	1
107	1P60-120006	Plate	1
108	B00008	Bolt	1
109	1P60-020007	Retainer Plate	1
110	B02007	Packing	1
111	1P60-020002	Shaft	1
112	1P60-020008	Clip	1
113	1P60-020005	Governor	1
114	1P60-020003	Governor Valve Pin	2
115	1P60-020009	Governor Valve	2
116	1P60-020006	Governor Thrust Plate	1
117	1P60-020001	Sump	1
118	B020008	Sump Gasket	1
119	1P60-040011	Oil Drainer Bolt M10x15	2
120	1P60-020004	Sump Oil Seal	1
121	1P60-130002	Dip Stick	1
122	1P60-130001	Dip Stick Seal	1
123	1P60-130003	Dip Stick Tube	1
124	1P60-130004	Bush	1
125	B00010	Screw	1
126	B02009	O-ring	1
127	1P60-050010	Rocker Arms	2
128	1P60-040013	Sump Bolt M6x28	6

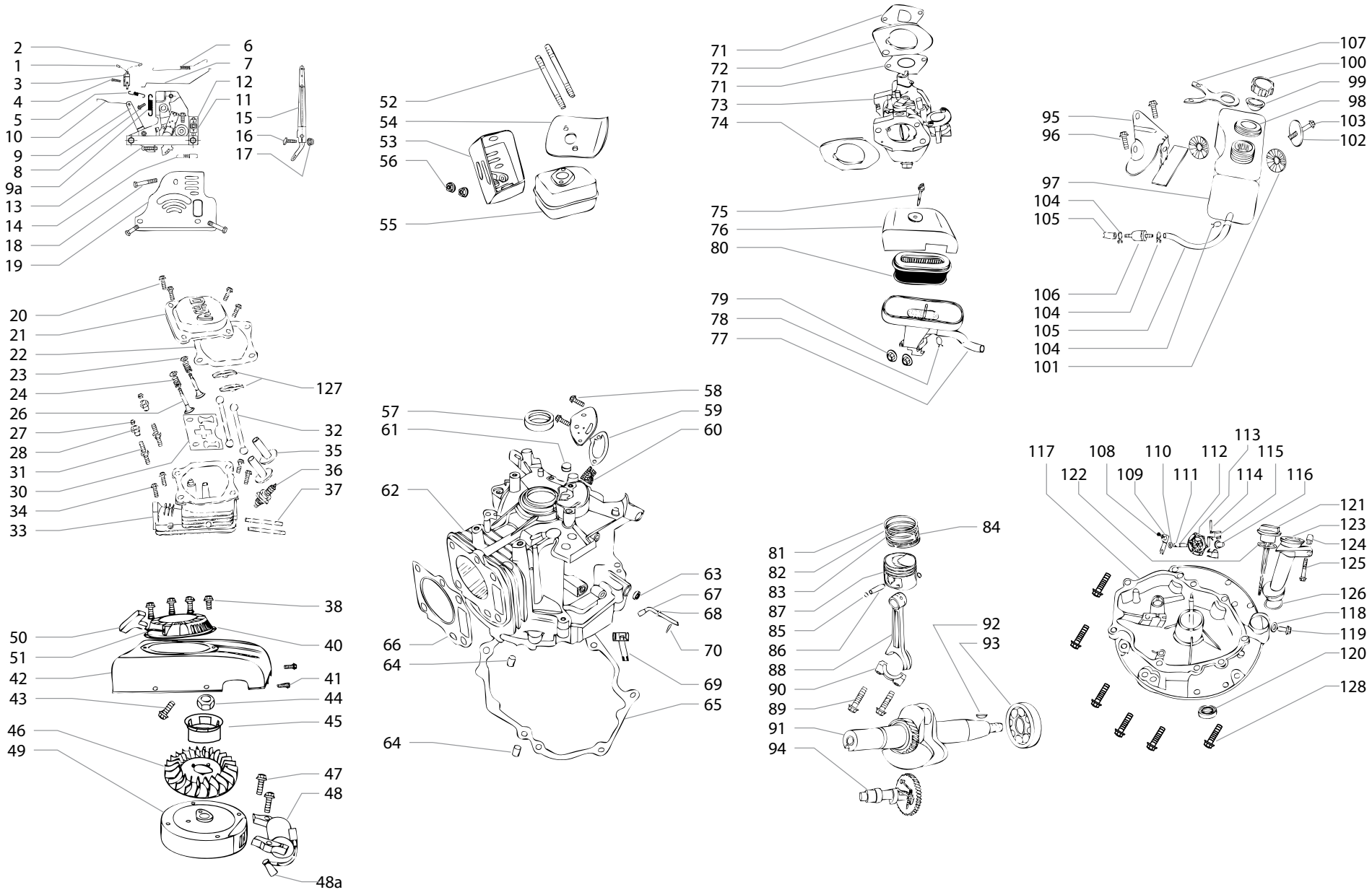
2
1
3
4
5
10
9
8
9a
13
14
18
19
6
7
12
11
15
16
17
52
54
53
56
55
71
72
71
73
74
75
76
80
79
78
77
107
100
99
98
103
102
95
96
97
104
105
106
104
105
104
101
20
21
22
23
24
26
27
28
31
30
34
33
127
32
35
36
37
57
61
62
58
59
60
63
67
68
70
69
65
66
64
64
113
117
108
110
112
115
122
109
111
114
116
121
123
124
125
126
118
119
120
128
38
40
41
44
45
50
51
42
43
46
49
47
48
48a
81
82
83
87
85
86
88
90
89
91
94
84
92
93

OHV550, Engine Used on PowerMulch 550

SANLI GENUINE SPARE PARTS

Item	Part No	Description	Qty
-	1P68-12001	Complete OHV550 Engine	1
1	1P68-010001	Oil Seal Ø25 x Ø38 x 7	1
2	1P68-010002	Bolt of Oil Filter Cover M6 x 12	2
3	1P68-010003	Oil Filter Cover	1
4	1P68-010004	Rubber Washer of Oil Filter Cover	1
5	1P68-010005	Engine Oil Filter	1
6	1P68-010006	Oil Filter Valve Ø16 x 1	1
7	1P68-010007	Crankcase	1
8	1P68-010008	Oil Seal Timing Swing Rod Ø5.3 x Ø11 x 4	1
9	1P68-010009	Timing Swing Rod	1
10	1P68-010010	Clip of timing Swing Rod	1
11	1P68-010011	Spring Slit Pin	1
12	1P68-010012	Engine Oil Sucker	1
13	1P68-010013	Location Pin of Crankcase Ø8 x14	2
14	1P68-010014	Sump Gasket	1
15	1P68-010015	Cylinder Head Gasket	1
16	1P68-010016	Crankshaft Bearing	1
17	1P68-020001	Heating Protect Cover	1
18	1P68-020002	Cylinder Head Cover M6 x 16	4
19	1P68-020003	Rocker Cover	1
20	1P68-020004	Rocker Cover Gasket	1
21	1P68-020005	Spring Plate of Air-outlet Valve	1
22	1P68-020006	Valve Spring	2
23	1P68-020007	Air-inlet Valve	1
24	1P68-020008	Hood	1
25	1P68-020009	Spring Plate of Air-outlet Valve	1
26	1P68-020010	Air-outlet Valve	1
27	1P68-020011	Nut of Valve Rocker M6	2
28	1P68-020012	Adjusting Nut of Valve Rocker	2
29	1P68-020013	Rocker Arm	2
30	1P68-020014	Push Rod Guide	1

Item	Part No	Description	Qty
31	1P68-020015	Bolt of Valve Rocker	2
32	1P68-020016	Push Rod	2
33	1P68-020017	Cylinder Head	1
34	1P68-020018	Cylinder Head Bolt M8 x 50	4
35	1P68-020019	Cam Follower	2
36	1P68-020020	Spark Plug	1
37	1P68-020021	Stud Bolt of Carburetor	2
38	1P68-020022	Stud Bolt of Muffler	2
39	1P68-030001	Piston Ring Assembly	1
40	1P68-030002	Clip of Piston Pin	2
41	1P68-030003	Piston Pin Ø18 x 54	1
42	1P68-030004	Piston	1
43	1P68-030005	Connecting Rod Assembly	1
44	1P68-030006	Crankshaft	1
45	1P68-030007	Woodruff Key	1
46	1P68-030008	Timing Drive Gear	1
47	1P68-030009	Camshaft	1
48	1P68-040001	Bolt M6 x 12	1
49	1P68-040002	Plate of Governor Shaft	1
50	1P68-040003	Governor Gear Shaft	1
51	1P68-040004	Clip of Governor Gear Shaft	1
52	1P68-040005	Governor Gear	1
53	1P68-040006	Flyweight Pin	2
54	1P68-040007	Flyweight	2
55	1P68-040008	Sliding Sleeve	1
56	1P68-040009	Crankcase Cover	1
57	1P68-040010	Washer of Oil Drain Bolt Ø10 x 1.5	2
58	1P68-040011	Oil Drain Bolt M10 x 15	2
59	1P68-040012	Sump Oil Seal	1
60	1P68-040013	Bolt of Crankcase Cover M8 x 50	6
61	1P68-040014	Oil Dipstick & Tube Assembly	1

Item	Part No	Description	Qty
62	1P68-040015	Sleeve Ø6 x Ø14 x 14	1
63	1P68-040016	Bolt of oil Gauge Tube M6 x 45	1
64	1P68-050001	Brake Assembly	1
65	1P68-050002	Bolt M6 x 12, M6 x 16	2
66	1P68-050003	Chock Switch	1
67	1P68-060001	B Gasketr of Carburetor	1
68	1P68-060002	Insulating Mat of Carburetor	1
69	1P68-060003	A Gasket of Carburetor	1
70	1P68-060004	Carburettor	1
71	1P68-060005	Rubber Gasket of Carburetor	1
72	1P68-060006	Air Filter Top Cover	1
73	1P68-060007	Air Filter Element	1
74	1P68-060008	Air Filter Bottom	1
75	1P68-060009	Breather Tube	1
76	1P68-060010	Nut M6	2
77	1P68-070001	Ignition Switch	1
78	1P68-070002	Bolt of Ignition Switch M4 x 8	1
79	1P68-070003	Spring of Ignition Switch	1
80	1P68-070004	Throttle Spring	1
81	1P68-070005	Throttle Rod	1
82	1P68-070006	Bolt of Throttle Controller	2
83	1P68-070007	Throttle Controller	1
84	1P68-070008	Air Chock Rod	1
85	1P68-070009	Governor Spring	1
85a	1P60-140009	Governor Return Spring	1
86	1P68-070010	Throttle Control Rocker	1
87	1P68-070011	"""T"" Bolt"	1
88	1P68-070012	Nut M6	1
89	1P68-070013	Fuel Pipe Clip	1
90	1P68-080001	Fuel Tank Bracket	1
91	1P68-080002	Bolt of Fuel Tank Bracket	2

Item	Part No	Description	Qty
92	1P68-080003	Fuel Tank Cap	1
93	1P68-080004	Fuel Tank	1
94	1P68-080005	Cushion Blocking of Fuel Tank	2
95	1P68-080006	Fuel Tank Washer	1
96	1P68-080007	Fuel Tank Bolt M8 x 55	1
97	1P68-080008	A Clip of Fuel Pipe (Big)	1
98	1P68-080009	B Clip of Fuel Pipe (Small)	3
99	1P68-080010	Fuel Pipe	2
100	1P68-080011	Fuel Filter	1
101	1P68-090001	Muffler	1
102	1P68-090002	Exhaust Gasket Shield	1
103	1P68-090003	Small Washer of Exhaust	4
104	1P68-090004	Exhaust Muffler Shield	1
105	1P68-090005	Muffler Bolts	2
106	1P68-100001	Starter Bolt	4
107	1P68-100002	Starter	1
108	1P68-100003	Engine Cover	1
109	1P68-100004	Engine Cover Bolt	2
110	1P68-100005	Flywheel Bolt M14	1
111	1P68-100006	Starter Cup	1
112	1P68-100008	Flywheel	1
113	1P68-100009	Ignitor Coil Bolt M6 x 25	2
114	1P68-100010	Ignitor Coil	1
114a	B02019A	Spark Plug Boot	1
115	1P68-070014	Governor Cover	1
116	1P68-070015	Air Filter Cover Nuts	2
117	1P60-120006	Fuel TankTop Plate	1

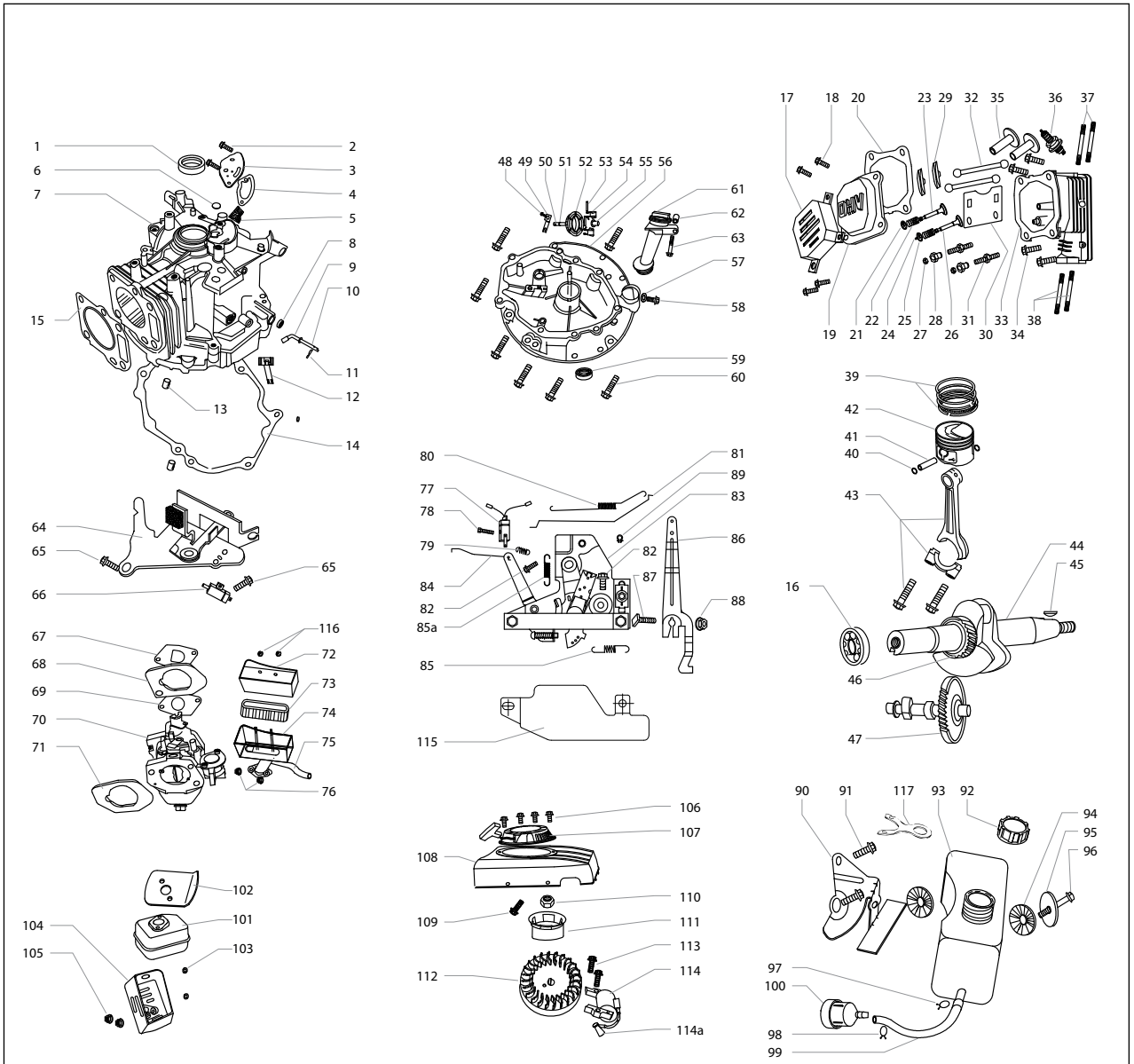

BCB260 - Brushcutter 26cc Bent Shaft

SANLI GENUINE SPARE PARTS

Item	Part No	Description	Qty
Bent Shaft Component			
1	BCB2-1	Flexible Inner Drive Shaft	1
2	BCB2-2	Drive Shaft Sleeve	1
3	BCB2-3	Outer Tube	1
30	BCB2-30	Outer Tube Handle Sleeve	1
Safety Guard Components			
S	**BCB2-S**	**Safety Guard Assembly**	**1**
4	BCB2-4	Screw M6x60	2
5	BCB2-5	Holder	1
6	BCB2-6	Screw M5x10	1
15	BCB2-15	Washer 6	1
16	BCB2-16	Butterfly Nut	1
17	BCB2-17	Safety Guard	1
18	BCB2-18	Safety Guard Blade	1
19	BCB2-19	Screw M5x16	2
Gear Head Assembly			
G	**BCB2-G**	**Gear Head Assembly**	**1**
8	BCB2-8	Gear Head Drive	1
9	BCB2-9	Bearing	2
10	BCB2-10	Sleeve	1
11	BC2-11	Screw M5x12	2
12	BCB2-12	Screw M5x20	2
13	BCB2-13	Gear Head Housing	1
14	BCB2-14	Holder / Gear Head Drive	1
Cutting Head Components			
C	**BCB2-C**	**Cutting Head Assembly**	**1**
20		Washer	1
21		Cutting Box Cover 1	2
27		Bushing	2

Item	Part No	Description	Qty
28		Plate	2
29		Spring	1
64		Stopper	1
65		Connecting Shaft	1
66		Limit Plate	1
67		Plate	1
68		Spring	1
69		Spring Base	1
70		Screw M4x12	1
71		Rope Pulley	1
72		Lock Nut	1
73		Cutting Box Cover 2	1
Holder Components			
22	BCB2-22	Handle Tube Sleeve	1
23	BCB2-23	Handle Assembly	1
24	BC2-24	Handle Top	1
25	BCB2-25	Handle Lower	1
26	BCB2-26	Screw M5x35	4
Clutch Components			
31	**BCB2-31**	**Clutch Assembly**	**1**
32	BCB2-32	Clutch Drum	1
33	BC2-33	Circlip 35	1
34	BC2-34	Bearing 6202-2RS/P5	2
35	BC2-35	Circlip15	1
36	BC2-36	Clutch Drum Case	1
55	BC2-55	Rubber Cover	1
11	BC2-11	Locating Screw M5x12	1
56	BC2-56	Lower Clamp A	1
57	BC2-57	Upper Clamp B	1

Item	Part No	Description	Qty
58	BC2-58	Washer 6	4
59	BC2-59	Washer 6	4
60	BC2-60	Clamp Screw M6x20	4
61	BC2-61	Clamp Screw M5x25	2
62	BC2-62	Washer 5	2
63	BC2-63	Washer 5	2
Lever Assembly			
37	**BC2-L**	**Lever Assembly**	**1**
38	BC2-38	Clamp	1
50	BC2-50	Screw M5x20	2
7	BC2-7	Nut M5	3
39	BC2-39	Rubber Handle Cover	1
40	BC2-40	Lever Box- Right	1
41	BC2-41	Clamp	1
42	BC2-42	Screw M5x10	1
43	BC2-43	Spring Bracket	1
44	BC2-44	Spring	1
45	BC2-45	Spring	1
46	BC2-46	Spring	1
47	BC2-47	Safety Lever	1
48	BC2-48	Throttle Trigger	1
49	BC2-49	Throttle Cable	1
51	BC2-51	Screw M5x30	1
52	BC2-52	Lever Box- Left	1
53	BC2-53	Stop Switch	1
54	BC2-54	Sleeve	1
54	BC2-54	Sleeve	1
53	BC2-53	Stop Switch	1
54	BC2-54	Sleeve	1

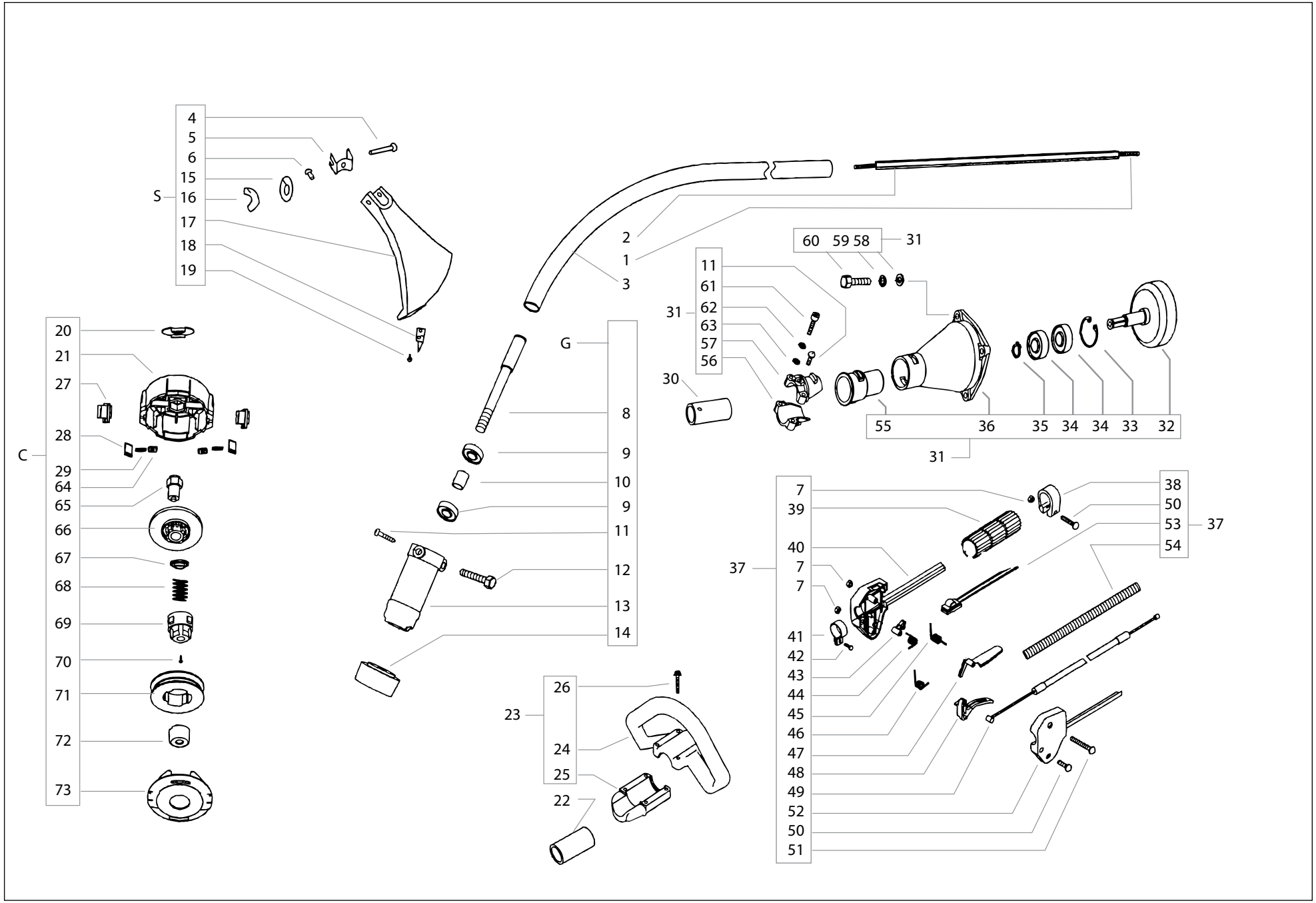
S
4
5
6
15
16
17
18
19
2
1
3
60 59 58
31
11
61
62
63
57
56
31
30
55 36 35 34 34 33 32
31
G
8
9
10
9
11
12
13
14
C
20
21
27
28
29
64
65
66
67
68
69
70
71
72
73
7
39
40
7
7
41
42
43
44
45
46
47
48
49
52
50
51
37
38
50
53
54
37
23
26
24
25
22

BCS260 - Brushcutter 26cc Straight Shaft

SANLI GENUINE SPARE PARTS

Item	Part No	Description	Qty
Gear Case Components			
1	**BCS2-1**	**Gear Case Assembly**	**1**
17	BCS2-17	Blade Holder (A)	1
18	BCS2-18	Blade Holder (B)	1
19	BCS2-19	Washer	1
20	BCS2-20	Nut M10x1.25	1
21	BCS2-21	Split Pin 2x16	1
Blade			
22	BCS2-22	Blade	1
71	BCS2-71	Blade Cover	1
Clutch Drum Component			
23	**BCS2-23**	**Clutch Drum Component**	1
24	BCS2-24	Clutch Drum	1
25	BC2-33	Circlip 35	1
26	BC2-34	Bearing 6202RS/P5	2
27	BC2-35	Circlip 15	1
28	BC2-36	Clutch Drum Case	1
29	BC2-55	Rubber Cover	1
11	BC2-11	Locating Screw M5x12	1
30	BC2-61	Screw M5x25	2
31	BC2-62	Washer 5	2
32	BC2-63	Washer 5	2
33	BC2-56	Lower Clamp A	1
34	BC2-57	Upper Clamp B	1
35	BC2-60	Screw M6x20	4
36	BC2-59	Washer 6	4
37	BC2-58	Washer 6	4

Item	Part No	Description	Qty
Harness Tube Clamp			
38	BCS2-38	Holder Assembly	1
Shaft Component			
43	**BCS2-43**	**Straight Shaft Assembly**	**1**
44	BCS2-44	Rubber Bush	6
45	BCS2-45	Oil-Bearing 8x14x14	6
46	BCS2-46	Drive Shaft	1
47	BCS2-47	Outer Tube	1
Handle			
48	**BCS2-48**	**Handle Assembly**	1
49	BCS2-49	Screw M5x30	4
50	BC2-24	Handle Top	1
51	BCS2-51	Handle Lower	1
Throttle Lever Components			
52	**BC2-L**	**Lever Assembly**	1
30	BC2-61	Screw M5x25	1
42	BC2-7	Nut M5	3
53	BC2-42	Screw M5x10	1
54	BC2-41	Clamp	1
55	BC2-40	Lever Box- Right	1
56	BC2-39	Rubber Handle Cover	1
57	BC2-38	Clamp	1
58	BC2-53	Stop Switch	1
59	BC2-43	Spring Bracket	1
60	BC2-44	Spring	1
61	BC2-45	Spring	1
62	BC2-47	Safety Lever	1

Item	Part No	Description	Qty
63	BC2-46	Spring	1
64	BC2-48	Throttle Trigger	1
65	BC2-49	Throttle Cable	1
66	BC2-54	Tube	1
67	BC2-50	Screw M5x20	1
68	BC2-51	Screw M5x30	1
69	BC2-52	Lever Box- Left	1
Safety Guard Components			
72	BCS2-72	Screw M5x20	3
73	BCS2-73	Washer 5	1
74	BCS2-74	Bracket for safety guard	1
75	BCS2-75	Screw M5x30	2
76	BCS2-76	Safety Guard	1
77	BCS2-77	Safety Guard Spacer	2
78	BCS2-78	Screw M5x16	4
83	BCS2-83	Safety Guard Blade Holder	1
Harness Assembly			
84	BCS2-84	Harness	1
Nylon Cutting Head			
85	BCS2-85	Nylon Cutting Head Assembly	1

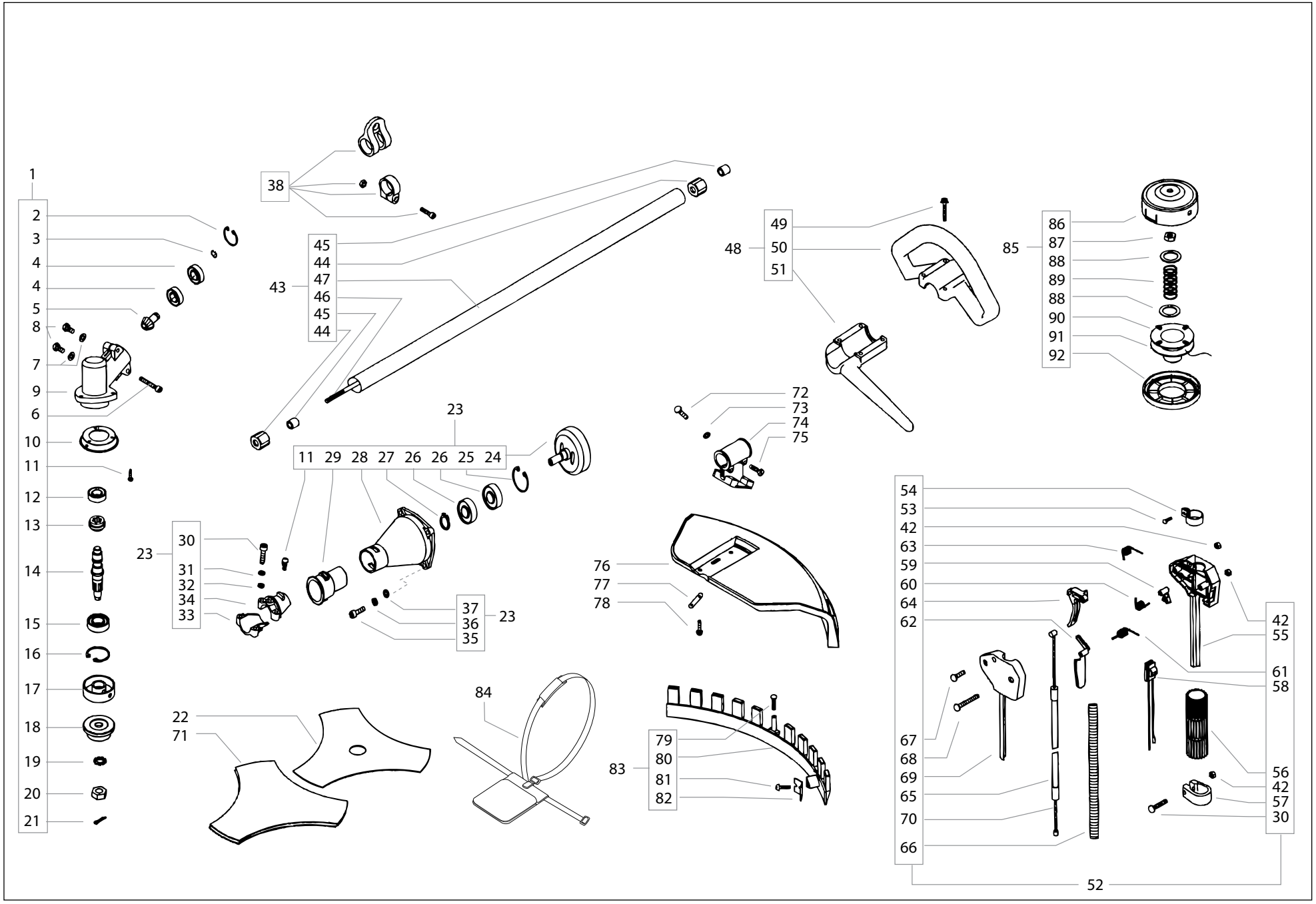
1
2
3
4
4
5
8
7
9
6
10
11
12
13
14
15
16
17
18
19
20
21
38
45
44
47
46
45
44
43
23
11 29 28 27 26 26 25 24
23
30
31
32
34
33
37
36
35
23
22
71
84
79
80
81
82
83
49
50
51
48
72
73
74
75
76
77
78
86
87
88
89
88
90
91
92
85
54
53
42
63
59
60
64
62
67
68
69
65
70
66
42
55
61
58
56
42
57
30
52

SPS260 - Pole Saw and Chain Saw Attachment

SANLI GENUINE SPARE PARTS

Item	Part No	Description	Qty
Case Cover			
1	PS3-1	Oil Cover Screw M4x12	4
2	PS3-2	Oil Cover	1
3	PS3-3	Oil Cover Gasket	1
Chainsaw Head Components			
5	PS3-5	Chain Bar Safety Cover	1
6	PS3-6	Oil Pump Assembly	1
8	PS3-8	Chain	1
9	PS3-9	Chain Bar	1
Oil Filler Components			
F	**PS3-F**	**Oil Filler Cap Assembly**	**1**
50	PS3-50	Oil Filler Cap	1
51	PS3-51	Inner Oil Cover	1
52	PS3-52	Sleve	1
53	PS3-53	Valve	1
54	PS3-54	O Ring	1
Gear Case Components			
G	**PS3-G**	**Gear Case Assembly**	**1**
27	PS3-27	Nut M8	1
28	PS3-28	Gear Case Cover	1
Clutch Drum Component			
95	**BCS2-23**	**Clutch Drum Component**	**1**
96	BCS2-24	Clutch Drum	1
97	BC2-33	Circlip 35	1
98	BC2-34	Bearing 6202-2RS/P5	2
99	BC2-35	Circlip 15	1
100	BC2-36	Clutch Drum Case	1
101	BC2-55	Rubber Cover	1
88	BC2-11	Locating Screw M5x12	1

Item	Part No	Description	Qty
29	BC2-61	Screw M5x25	2
34	BC2-62	Washer 5	2
102	BC2-63	Washer 5	2
103	BC2-56	Lower Clamp A	1
104	BC2-57	Upper Clamp B	1
105	BC2-60	Screw M6x20	4
86	BC2-59	Washer 6	4
87	BC2-58	Washer 6	4
Harness Tube Clamp			
46	**BCS2-38**	**Holder Assembly**	**1**
Long Shaft Component			
39	BCS2-44	Rubber Bush	2
40	BCS2-45	Oil-Bearing 8x14x14	2
41	BCS2-46	Drive Shaft	1
42	BCS2-47	Outer Tube	1
77	PS3-77	Joint B	1
93	PS3-93	Rubber Pipe 2	1
38	PS3-38	Washer	**1**
Short Shaft Component			
39	BCS2-44	Rubber Bush	2
40	BCS2-45	Oil-Bearing 8x14x14	2
85	PS3-85	Short Shaft	1
84	PS3-84	Short Tube	1
94	PS3-94	Rubber Pipe 1	1
38	PS3-38	Washer	1
Throttle Lever Components			
61	**BC2-L**	**Throttle Lever Assembly**	1
62	BC2-42	Screw M5x10	1
63	BC2-46	Spring	1

Item	Part No	Description	Qty
64	BC2-48	Throttle Trigger	1
65	BC2-49	Throttle Cable	1
66	BC2-50	Screw M5x20	1
67	BC2-51	Screw M5x30	1
68	BC2-52	Lever Box- Left	1
69	BC2-54	Tube	1
70	BC2-61	Screw M5x25	1
71	BC2-38	Clamp	1
72	BC2-7	Nut M5	3
73	BC2-39	Rubber Handle Cover	1
74	BC2-40	Lever Box- Right	1
75	BC2-7	Nut M5	1
76	BC2-7	Nut M5	1
78	BC2-41	Clamp	1
79	BC2-43	Spring Bracket	1
80	BC2-44	Spring	1
81	BC2-45	Spring	1
82	BC2-47	Safety Lever	1
83	BC2-53	Stop Switch Assembly	1
Pipe Connector Components			
C	**PS3-C**	**Pipe connector assembly**	1
55	PS3-55	Screw M6 x 35	1
86	BC2-59	Spring Washer 6mm Black	1
87	BC2-58	Flat Washer 6mm Black	1
88	BC2-22	Screw M5 x 12	1
89	PS3-89	Locking Knob	1
90	PS3-90	Pipe Joint	1
91	PS3-91	Washer	1
92	PS3-92	Locating Pin	1

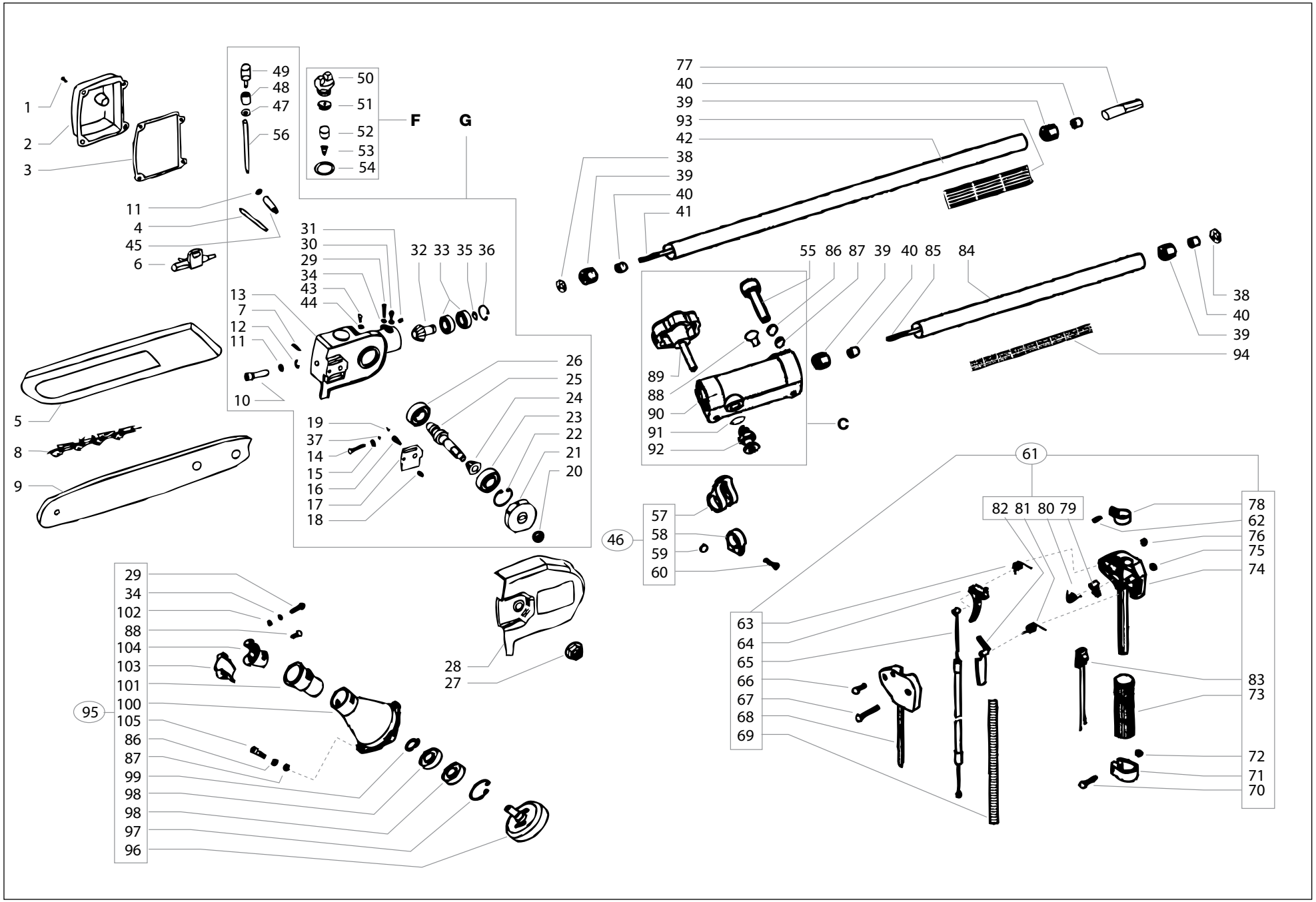
1
2
3
49
48
47
56
50
51
52
53
54
F
G
11
4
45
6
31
30
29
34
43
44
13
7
12
11
10
32 33 35 36
26
25
24
23
22
21
20
19
37
14
15
16
17
18
5
8
9
77
40
39
93
42
38
39
40
41
55 86 87 39 40 85 84
38
40
39
94
89
88
90
91
92
C
61
82 81 80 79
78
62
76
75
74
57
58
59
60
46
63
64
65
66
67
68
69
83
73
72
71
70
28
27
29
34
102
88
104
103
101
100
105
86
87
99
98
98
97
96
95

SPS260 - Pole Saw HedgeTrimmer Attachment

Item	Part No	Description	Qty
Trimmer Components			
1	PS2-1	Nut M5	2
2	PS2-2	Blade Brace	1
3	PS2-3	Grease nipple	3
4	PS2-4	Nut M6	4
5	PS2-5	Clip	1
6	PS2-6	Blade Support	1
7	PS2-7	Screw M5 x 14	2
8	PS2-8	Blade Assembly	1
9	PS2-9	Seal Felt	1
10	PS2-10	Washer 6	4
11	PS2-11	Bolt	4
Gear Case Components			
12	PS2-12	Washer 4	4
13	PS2-13	Washer 4	4
14	PS2-14	Screw M4x12	4
15	PS2-15	Gear Case Cover	1
16	PS2-16	Gear Case Gasket	1
G	PS2-G	Gear Case Assembly	1
17	PS2-17	Ball Bearing 608-2RS	2
18	PS2-18	Eccenter Blade Drive	1
19	PS2-19	Rear Gear Case	1
20	PS2-20	Ball Bearing 6000- 2RS	2
21	PS2-21	Circlip 26	2
22	PS2-22	Gear	1
23	PS2-23	Circlip 6	2
25	PS2-25	Screw M4 x 10	4

Item	Part No	Description	Qty
26	PS2-26	Nut M6	1
H	**PS2-H**	**Handgrip Assembly**	1
27	BC2-59	Spring Washer 6mm Black	3
28	PS2-28	Washer	3
35	PS2-35	Screw	1
36	PS2-36	Spring	1
37	PS2-37	Handgrip	1
38	PS2-38	Screw	1
29	PS2-29	Circlip 22	2
30	PS2-30	Gear Shaft Assembly	1
31	PS2-31	Sealing Washer	1
32	PS2-32	Gear Case Cover	1
33	PS2-33	Gasket	1
34	PS2-34	Screw Mx14	1
39	PS2-39	Swivel Bracket	1
40	BC2-61	Screw M5x25	1
41	PS2-41	Washer	1
42	PS2-42	Washer	1
43	PS2-43	Screw M5x10	1
44	PS2-44	Front Gear Case	1
45	PS2-45	Washer 5	1
46	PS2-46	Gear	1
47	PS2-47	Ball Bearing 6900-2Z	2
48	PS2-48	Connector Shaft	1

SANLI GENUINE SPARE PARTS

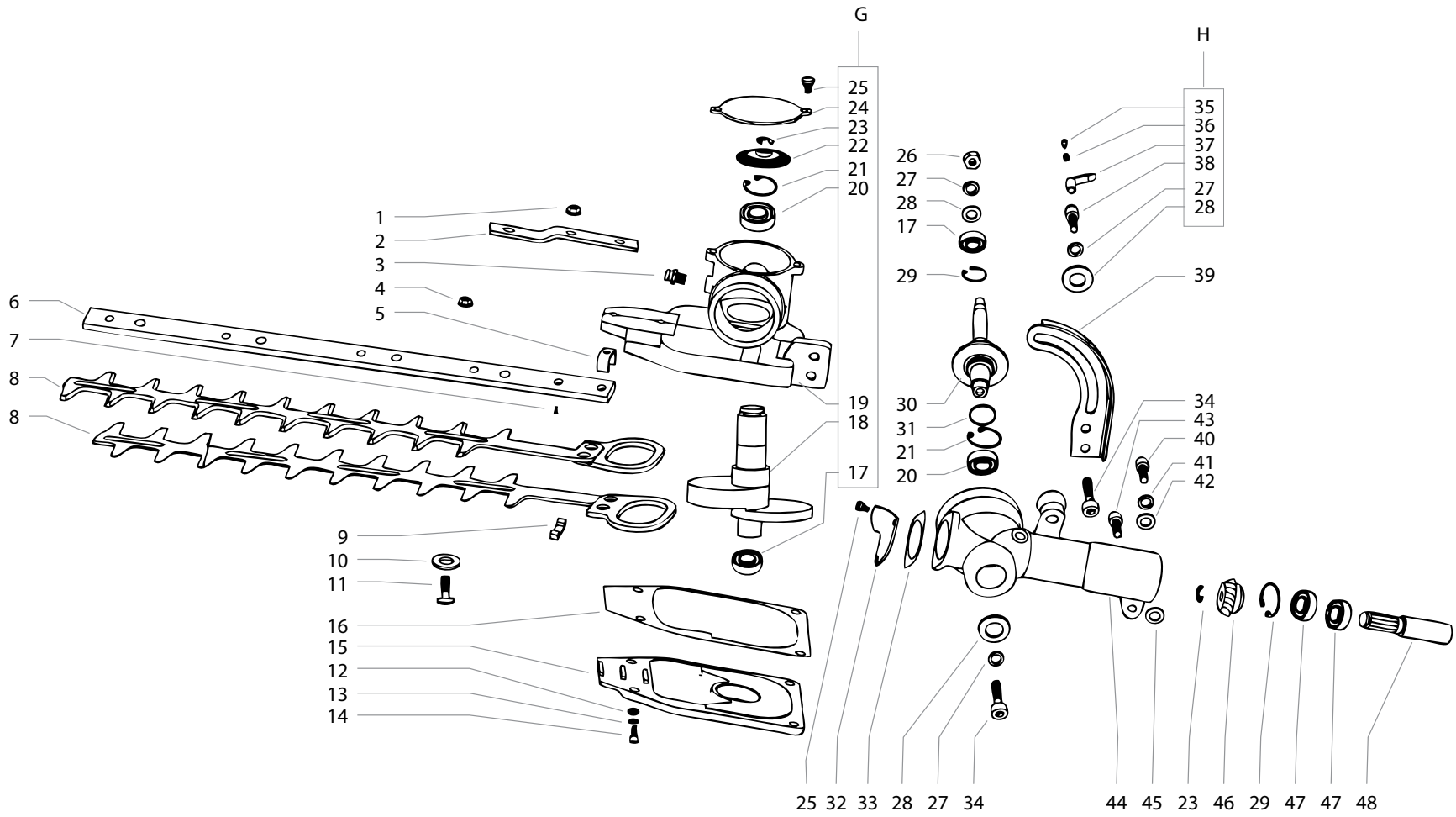
G
H
25
24
23
22
21
20
19
18
17
1
2
3
4
5
6
7
8
8
9
10
11
16
15
12
13
14
26
27
28
17
29
30
31
21
20
35
36
37
38
27
28
39
34
43
40
41
42
25 32 33 28 27 34
44 45 23 46 29 47 47 48

26cc 2-Stroke Engine (BCB260, BCS260, SPS260)

SANLI GENUINE SPARE PARTS

Item	Part No	Description	Qty
Air Filter Components			
1	EN1-1	Airfilter Cover Screw	1
2	EN1-2	Airfilter Cover	1
3	EN1-3	Filter Element	1
4	EN1-4	Screw M5X55	2
5	EN1-5	Airfilter Cover Base	1
6	EN1-6	Screw ST4X10	2
7	EN1-7	Choke	1
8	EN1-8	Choke Handle	1
Carburetor Components			
9	EN1-9	Carburetor Assembly	1
10	EN1-10	Gasket Carby Side	1
11	EN1-11	Screw M5X20	4
12	EN1-12	Inlet Manifold	1
13	EN1-13	Gasket Engine Side	1
Flywheel Components			
11	EN1-11	Screw M5x20	2
14	EN1-14	Pin B3X10	4
15	EN1-15	Screw M4X16	4
16	EN1-16	Flywheel Cover	1
Clutch Components			
17	EN1-17	Clutch Step Screw	2
18	EN1-18	Washer	2
19	EN1-19	Clutch Assembly	1
Ignition Coil Components			
23	EN1-23	Flywheel Nut M8X1	1
24	EN1-24	Stop Cord Component	1
15	EN1-15	Screw M4X16	1

Item	Part No	Description	Qty
25	EN1-25	Primary Cord Grommet	1
26	EN1-26	Ignition Coil Assembly	1
77	EN1-77	Spark Plug Boot	1
Flywheel			
27	EN1-27	Flywheel	1
Crankcase Components			
28	BC2-61	Screw M5X25	4
29	EN1-29	Spring Washer	6
30	EN1-30	Washer	6
31	EN1-31	Front Half Crankcase	1
32	EN1-32	Guide Plate	1
33	EN1-33	Crankcase Gasket	1
34	EN1-34	Oil Seal 12X22X7	2
35	EN1-35	Ball Bearing 6001/P5	2
36	EN1-36	Crankshaft / Conrod Assembly	1
37	EN1-37	Rear Half Crankcase	1
15	EN1-15	Guid Plate Screw M4x16	1
57	EN1-57	Crankhaft / Flywheel Key	1
Starter Pawl Components			
38	EN1-38	Starter Pulley	1
Starter & Starter Screw			
42	EN1-42	Starter Assembly	1
15	EN1-15	Screw M4X16	4
Fuel Tank Components			
62	EN1-62	Fuel Tank Cap Assembly	1
69	EN1-69	Fuel Tank	1
70	EN1-70	Washer	3
71	EN1-71	Screw M5X16	2

Item	Part No	Description	Qty
72	EN1-72	Screw M5X20	1
73	EN1-73	Fuel Tank Filter	1
74	EN1-74	Fuel Tank Grommet	1
75	EN1-75	Inlet Fuel Hose	1
76	EN1-76	Outlet Fuel Hose	1
Spark Plug Components			
47	EN1-47	Spark Plug Cover	1
48	EN1-48	Spark Plug	1
Engine Cover Components			
43	EN1-43	Screw M5X14	1
44	EN1-44	Top Cover	1
45	EN1-45	Engine Cover	1
46	EN1-46	Screw M4X12	1
Muffler Assembly			
52	EN1-52	Screw M5X55	2
29	EN1-29	Washer	2
30	EN1-30	Washer	2
51	EN1-51	Muffler	1
50	EN1-50	Muffler Gasket	1
Engine Cylinder Components			
49	EN1-49	Cylinder Bolts M5x20	4
53	EN1-53	Cylinder	1
54	EN1-54	Cylinder Base Gasket	1
55	EN1-55	Piston Rings / Set	2
56	EN1-56	Piston	1
58	EN1-58	Stop Ring	2
59	EN1-59	Gudgeon Pin	1
60	EN1-60	Gudgeon Pin Bearing	1
61	EN1-61	Gudgeon Pin Circlip	1

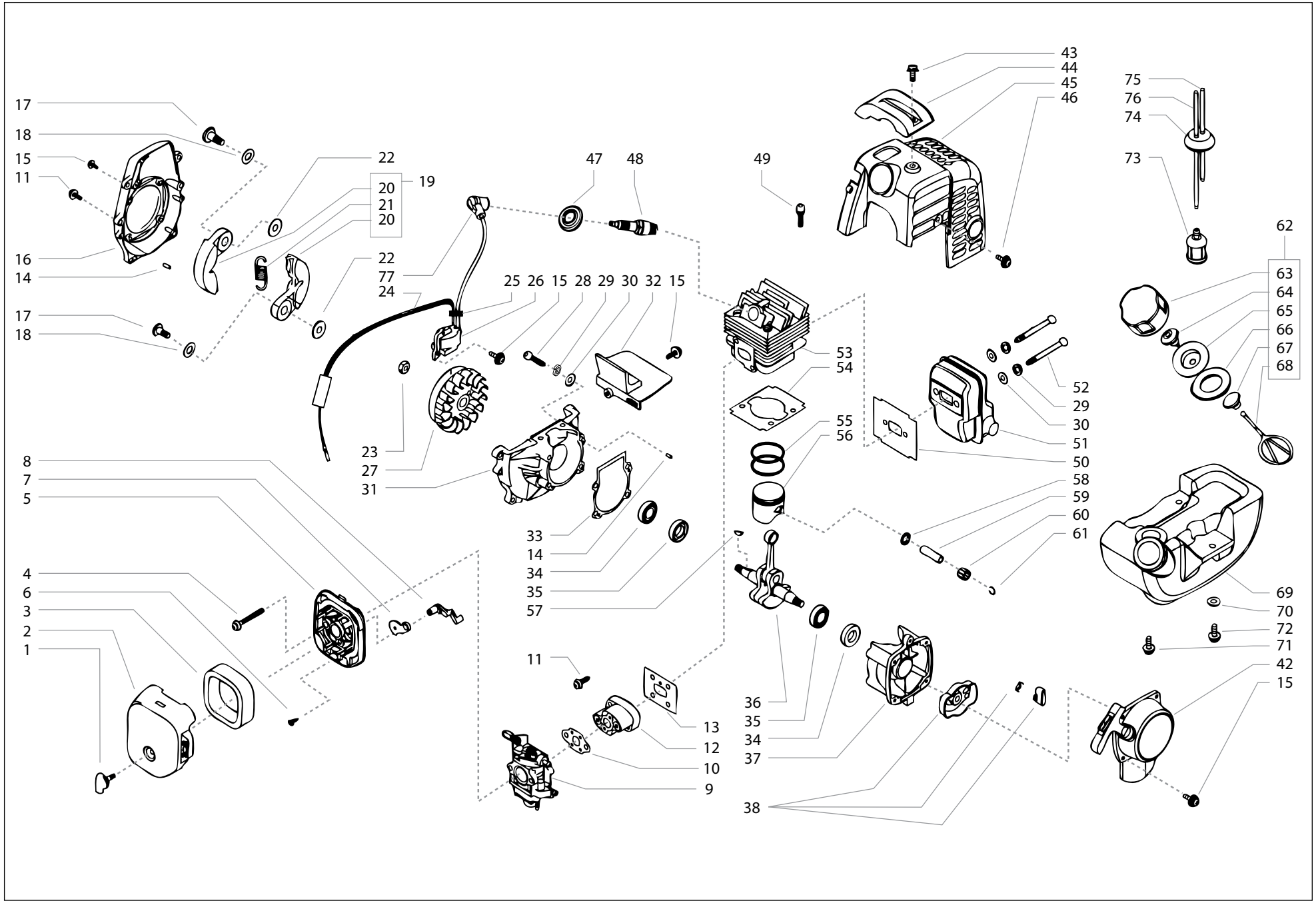
17
18
15
11
16
14
17
18
22
20
21
20
19
22
77
24
23
27
31
47
48
49
25 26 15 28 29 30 32 15
43
44
45
46
75
76
74
73
62
63
64
65
66
67
68
53
54
55
56
52
29
30
51
50
58
59
60
61
8
7
5
4
6
3
2
1
33
14
34
35
57
11
13
12
10
9
36
35
34
37
38
69
70
72
71
42
15

SLB260 Blower

Item	Part No	Description	Qty
1	BL2-1	Screw (M4 x 14)	1
2	BL2-2	Washer 4	1
3	BL2-3	Fan Net Cover	1
5	BL2-5	Spring	1
6	BL2-6	Washer	1
7	BL2-7	Spring Shaft	1
8	BL2-8	Left Handle Robber Cover	1
9	BL2-9	Stop Wire	1
10	BL2-10	Short Stop Wire	2
11	BL2-11	Throttle Lever	1
12	BL2-12	Throttle Lever Shaft	1
13	BL2-13	Washer 5	25
14	BL2-14	Screw M5 x 30	4
15	BL2-15	Pedestal	4
16	BL2-16	Screw M5 x 10	4
17	BL2-17	Impeller	1
18	BL2-18	Rear Cochlea Case	1
19	BL2-19	Screw M5 x 16	15
20	BL2-20	Connect Cover	1
21	BL2-21	Front Cochlea Case	1
22	BL2-22	Fuel Tank	1
23	BL2-23	Lower Handle	1
24	BL2-24	Upper Handle	1
25	BL2-25	Right Handle Ribber Cover	1
26	BL2-26	Screw St4.2 x 10	1
27	BL2-27	Screw M5 x 20	2
28	BL2-28	Stop Wire	2

Item	Part No	Description	Qty
29	BL2-29	Engine	1
30	BL2-30	Return Fuel Pipe	1
31	BL2-31	Fuel Pipe Rubber Bung	1
32	BL2-32	Inlet Fuel Pipe	1
33	BL2-33	Filter Cleaner	1
34	BL2-34	Fuel Tank Lid Assembly	1
35	BL2-35	Throttle Wire Component	1
36	BL2-36	Starter Rope Reel	1
37	BL2-37	Cole Spring	1
38	BL2-38	Safty Cover	1
39	BL2-39	Screw M4 x 30	3
40	BL2-40	Starter Rope	1
41	BL2-41	Starter Handle	1
42	BL2-42	Blow The Breeze Tube A	1
43	BL2-43	Blow The Breeze Tube B	1
44	BL2-44	Spanner	1
45	BL2-45	Inside Six Square Wrench	1
S	**BL2-S**	**Starter Assembly**	**1**

SANLI GENUINE SPARE PARTS

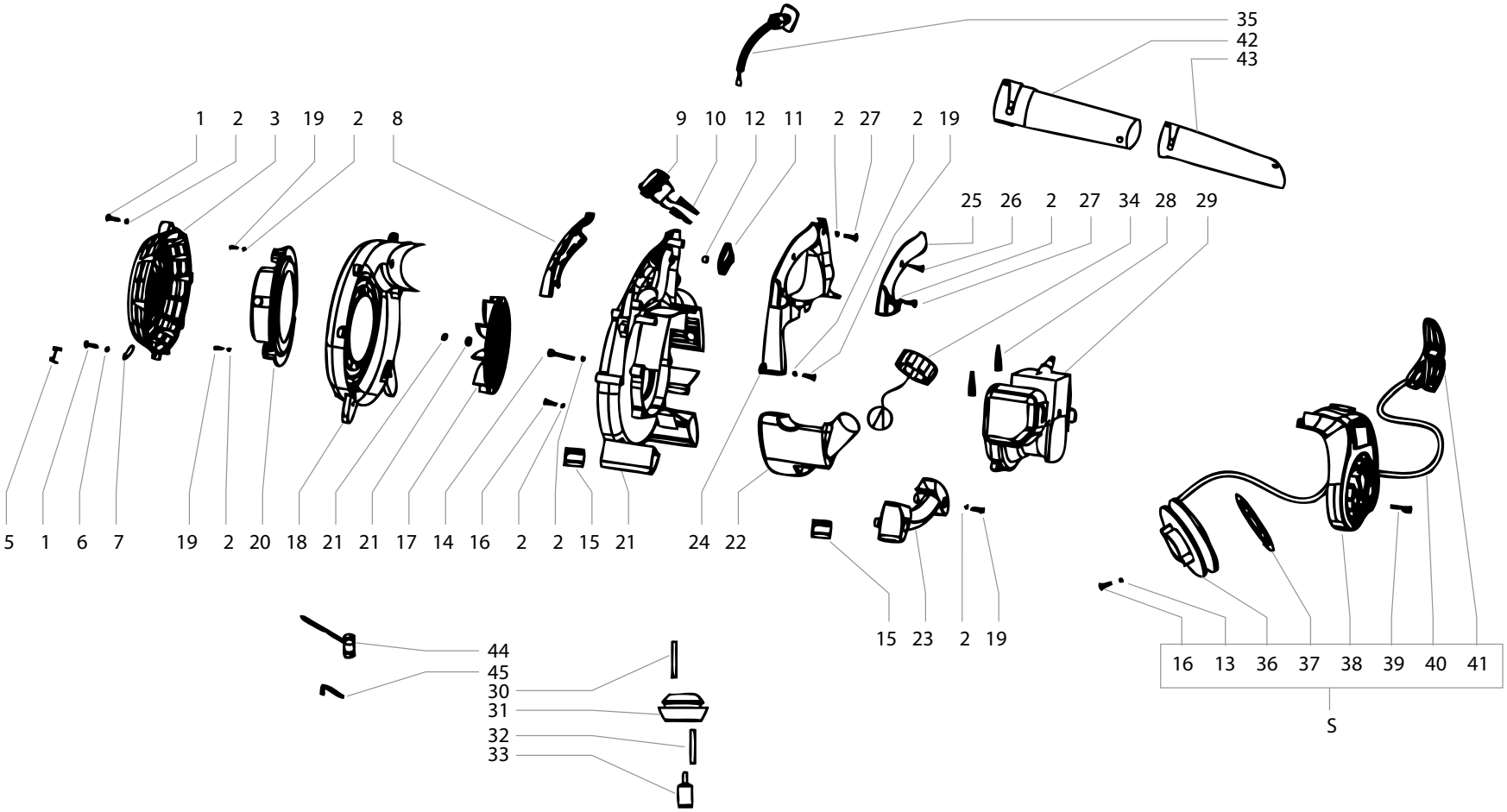
35
42
43
1 2 3 19 2 8
9 10 12 11 2 27 2 19
25 26 2 27 34 28 29
5 1 6 7 19 2 20 18 21 21 17 14 16 2 2 15 21 24 22
15 23 2 19
16 13 36 37 38 39 40 41
S
44
45
30
31
32
33

SLBV260 Blower Vac

Item	Part No	Description	Qty
1	BV2-1	Inhale Pipe A	1
2	BV2-2	Inhale Pipe B	1
3	BL2-19	Screw M5 x 16	14
4	BL2-2	Washer 4	26
5	BL2-20	Connect Cover	1
6	BL2-16	Screw M5 x 10	4
7	BV2-7	Connecter Safety Cover	1
8	BV2-8	Safty Switch	1
9	BV2-9	Button Connecter	1
10	BL2-6	Washer	1
11	BV2-11	Screw	1
12	BL2-3	Fan Net Cover	1
13	BL2-7	Spring Shaft	1
14	BL2-5	Spring	1
15	BL2-18	Rear Cochlea Case	1
16	BV2-16	Nut M8 x 1	1
17	BV2-17	Shatter Tooth	1
18	BL2-17	Impeller	1
19	BL2-14	Screw M5 x 30	4
20	BL2-8	Left Handle Robber Cover	1
21	BL2-21	Front Cochlea Case	1
22	BL2-15	Pedestal	4
23	BL2-22	Fuel Tank	1
24	BL2-27	Screw M5 x 20	2
25	BL2-23	Lower Handle	1
26	BL2-12	Throttle Lever Shaft	1
27	BL2-11	Throttle Lever	1
28	BL2-9	Stop Wire	1

Item	Part No	Description	Qty
29	BL2-10	Short Stop Wire	2
30	BL2-24	Upper Handle	1
31	BL2-25	Right Handle Ribber Cover	1
32	BL2-26	Screw St4.2 x 10	1
33	BL2-28	Stop Wire	2
34	BL2-29	Engine	1
35	BL2-13	Washer 5	1
36	BL2-36	Starter Rope Reel	1
37	BL2-37	Cole Spring	1
38	BL2-38	Safty Cover	1
39	BL2-39	Screw M4 x 30	3
40	BL2-40	Starter Rope	1
41	BL2-41	Starter Handle	1
42	BV2-42	Tail Pipe	1
43	BL2-35	Throttle Wire Component	1
44	BV2-44	Leave Bag	1
45	BV2-45	Harness Assembly	1
46	BL2-30	Return Fuel Pipe	1
47	BL2-31	Fuel Pipe Rubber Bung	1
48	BL2-32	Inlet Fuel Pipe	1
49	BL2-33	Filter Cleaner	1
50	BL2-34	Fuel Tank Lid Assembly	1
S	**BL2-S**	**Starter Assembly**	**1**

SANLI GENUINE SPARE PARTS

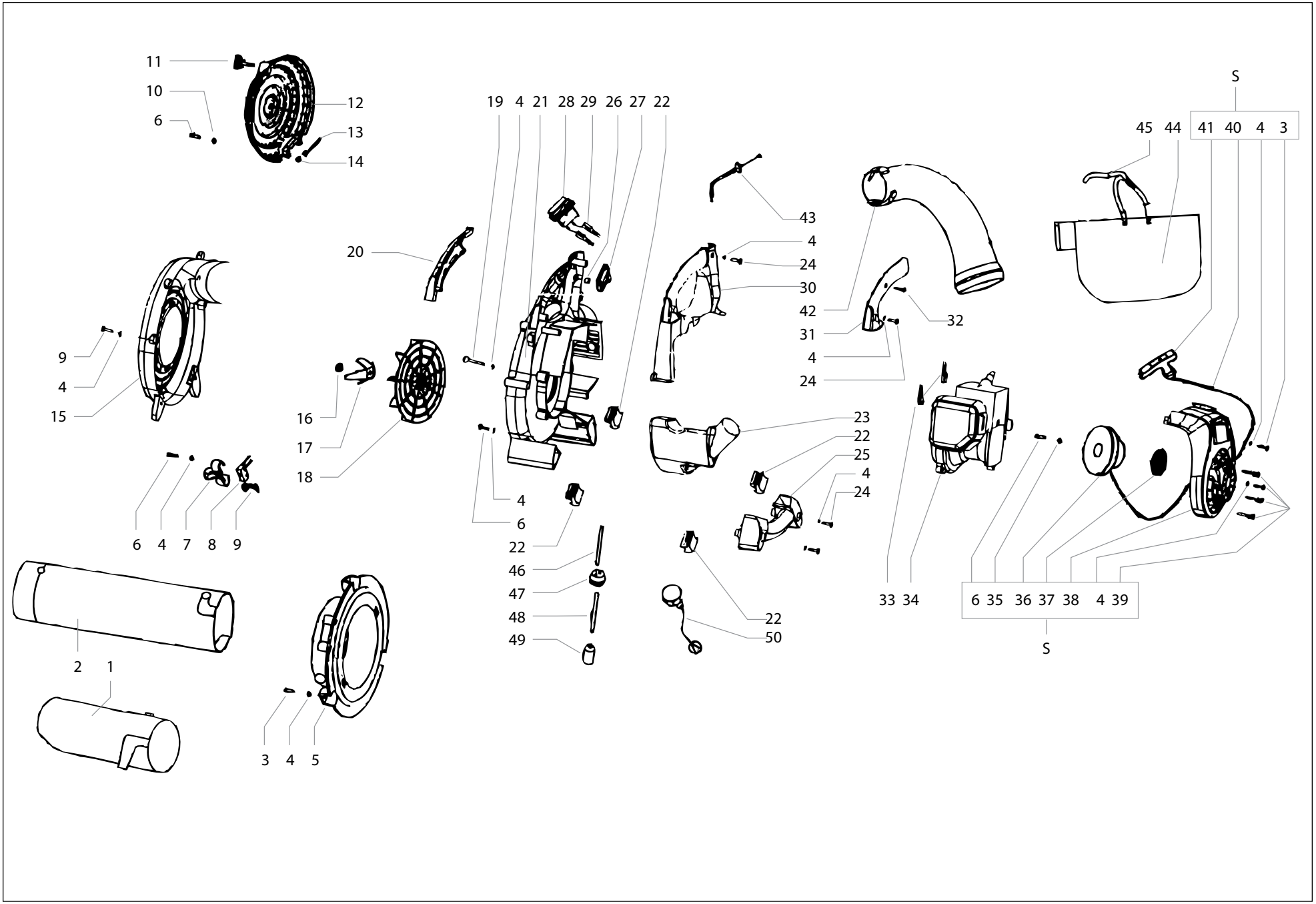
11
10
6
12
13
14
19 4 21 28 29 26 27 22
S
45 44 41 40 4 3
43
4
24
30
42
31
4
24
32
20
9
4
15
16
17
18
23
22
25
4
24
4
6
6 4 7 8 9
22
46
47
48
49
22
50
33 34
6 35 36 37 38 4 39
S
2 1
3 4 5

26cc 2-Stroke Engine (SLB260, SLBV260)

Item	Part No	Description	Qty
Coil Component			
45	EN1-8	Choke Handle	1
46	EN1-7	Choke	1
47	EN1-5	Airfilter Base Assembly	1
48	EN1-6	Screw ST4X10	2
49	EN1-4	Screw M5X55	2
50	EN1-3	Filter Element	1
51	EN1-2	Airfilter Outter Cover	1
52	EN1-1	Airfilter Cover Screw	1
Carburetor Assembly			
40	EN1-13	Inlet Manifold Gasket Engine Side	1
41	EN1-11	Screw M5x20	2
42	EN1-12	Inlet Manifold	1
43	EN1-10	Gasket Carby Side	1
44	BL1-44	Carburetor	1
Flywheel			
25	BL1-25	Flywheel	1
Starter Pulley Assembly			
37	EN1-39	Starter Pulley Assembly	1
Muffler Assembly			
1	EN1-52	Muffler Screw	2
2	EN1-29	Washer	2
3	EN1-30	Heat Insulator Washer	2
7	BL1-7	Muffler	1
8	BL1-8	Muffler Gasket	1
Magneto Stator Assembly			
4	BL1-4	Spark Plug Boot	1
5	BL1-5	Coil Wire Terminal	1

Item	Part No	Description	Qty
6	BL1-6	Spark Plug	1
12	BL1-12	Rubber Plug	1
13	BL1-13	Coil Mounting Screw	2
14	BL1-14	Coil Assembly	1
15	BL1-15	Heat Insulation Pad	2
Engine Cylinder Components			
9	BL1-9	Screw	2
10	BL1-10	Washer	2
11	BL1-11	Even Flat	2
16	BL1-16	Cylinder	1
17	EN1-54	Cylinder Base Gasket	1
18	EN1-55	Piston Rings / Set	2
19	EN1-56	Piston	1
20	EN1-59	Gudgeon Pin	2
21	EN1-61	Gudgeon Pin Circlip	2
Connecting Shaft			
24	BL1-24	Impeller Connecting Shaft	1
Crankcase Components			
22	EN1-58	Stop Ring	2
23	EN1-60	Gudgeon Pin Bearing	1
26	EN1-28	Screw M5X25	4
27	EN1-29	Spring Washer	4
28	EN1-30	Washer	4
29	EN1-34	Oil Seal 12X22X7	2
30	EN1-31	Front Half Crankcase	1

Item	Part No	Description	Qty
31	EN1-14	Pin B3X10	1
32	BL1-32	Ball Bearing	2
33	EN1-33	Crank Case Casket	1
34	EN1-57	Crankhaft / Flywheel Key	1
35	EN1-36	Crankshaft / Conrod Assembly	1
36	EN1-37	Rear Half Crank Case	1

SANLI GENUINE SPARE PARTS

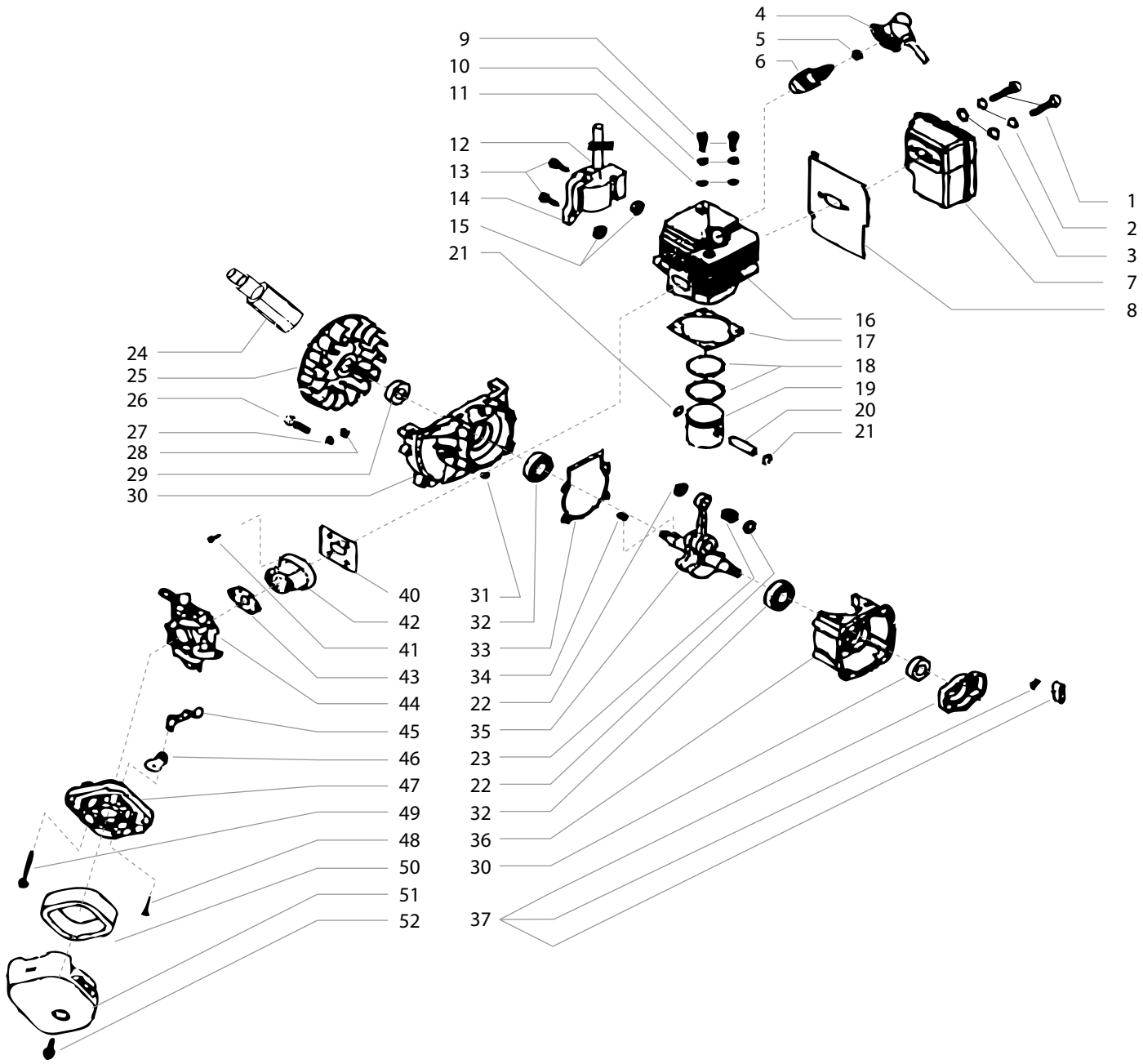
4
5
6
9
10
11
12
13
14
15
21
1
2
3
7
8
16
17
18
19
20
21
24
25
26
27
28
29
30
40
42
41
43
44
45
46
47
49
48
50
51
52
31
32
33
34
22
35
23
22
32
36
30
37

SLHT600 HedgeTrimmer

SANLI GENUINE SPARE PARTS

Item	Part No	Description	Qty
Handle Assembly			
1	HT2-1	Handle Right Side (A)	1
2	HT2-2	Handle Left Side (B)	1
3	HT2-3	Screw (ST4.2 x 15)	6
5	HT2-5	Stop Switch Assembly	1
6	HT2-6	Rubber Plug	1
18	HT2-18	Handle Cover Seat	1
19	HT2-19	Safety Lever	1
20	HT2-20	Throttle Trigger	1
21	HT2-21	Spring	1
Protecting Handle			
7	HT2-7	Screw Assembly (M5x40)	2
8	HT2-8	Protecting Handle	1
Gear Assembly			
10	HT2-10	Grear Case Inside Lid	1
11	HT2-11	Gear Case front felt seal	2
12	HT2-12	Gear Case Gasket	1
13	HT2-13	Ball Bearing	1
14	HT2-14	Washer	1
15	HT2-15	Screw (M4x12)	10
16	HT2-16	Spring Washer	10
17	HT2-17	Circlip	1
22	HT2-22	Ball Bearing (6002Z)	1
23	HT2-23	Ball Bearing (6002)	1
24	HT2-24	Circlip	1
25	HT2-25	Clutch Drum	1
26	HT2-26	Gear Case	1

Item	Part No	Description	Qty
27	HT2-27	Eccenter	1
28	HT2-28	Needle Bearing	1
29	HT2-29	Screw (M6 x14)	2
30	HT2-30	Transmission Arn	2
40	HT2-40	Screw (M5x30)	4
41	HT2-41	Flat Washer	4
42	HT2-42	Gear Case Lid	1
43	HT2-43	Left Handle Connect	1
44	HT2-44	Screw (ST4.2 x 12)	5
45	HT2-45	Bolt	1
46	HT2-46	Throttle Cable	1
47	HT2-47	Spacing Cover	1
48	HT2-48	Knob Camp	1
49	HT2-49	Right Handle Connect	1
50	HT2-50	Grease Nipple	1
51	HT2-51	Cable Tie	1
52	HT2-52	Damping Seat	4
53	HT2-53	Damping Cover	4
54	HT2-54	Bracket	1
55	HT2-55	Flex Cable Cover	1
Blade			
4	HT2-4	Blade Cover	1
9	HT2-9	Blade End Protection	1
31	HT2-31	Washer	1
32	HT2-32	Blade Support Bracket	1
33	HT2-33	Safeguard	1
34	HT2-34	Blade Settle Plate	1
35	HT2-35	Blade	2

Item	Part No	Description	Qty
36	HT2-36	Blade Adjust Bolt	5
37	HT2-37	Steel Flat Washer	5
38	HT2-38	Plate Washer	6
39	HT2-39	Nylon Lock Nut	5

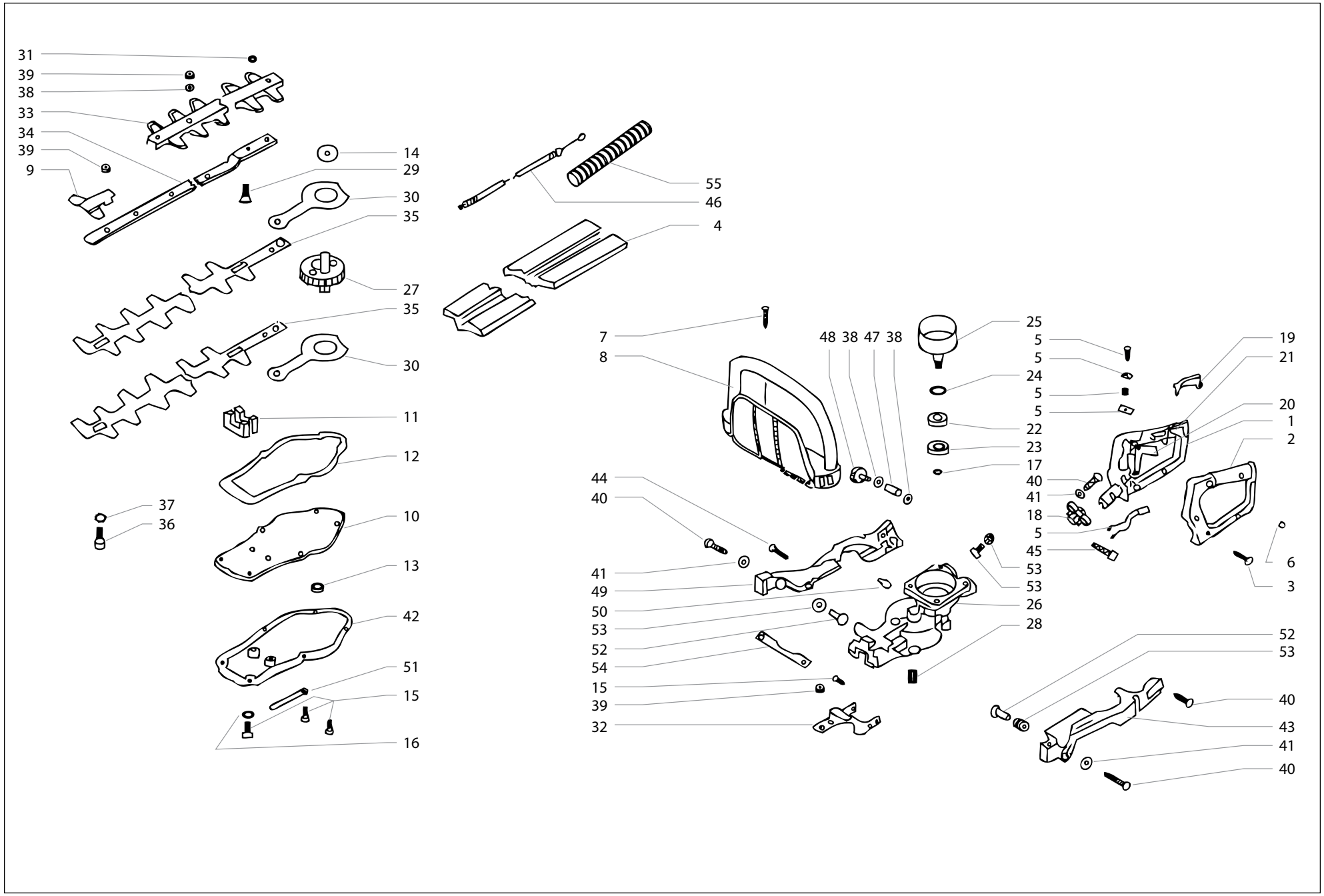
31
39
38
33
34
39
9
14
29
30
35
27
35
30
11
12
37
36
10
13
42
51
15
16
55
46
4
7
8
48 38 47 38
25
5
5
24
5
5
22
23
17
40
41
18
5
45
53
53
26
28
44
40
41
49
50
53
52
54
15
39
32
19
21
20
1
2
6
3
52
53
40
43
41
40

26cc 2-Stroke Engine (SLHT600)

SANLI GENUINE SPARE PARTS

Item	Part No	Description	Qty
Air Filter Components			
51	EN1-1	Airfilter Cover Screw	1
50	EN1-2	Airfilter Cover	1
49	EN1-3	Filter Element	1
48	EN1-4	Screw M5X55	2
47	EN1-5	Airfilter Cover Base	1
47	EN1-6	Screw ST4X10	1
47	EN1-7	Choke	1
47	EN1-8	Choke Handle	1
Carburetor Components			
6	EN1-13	Cylinder Side Gasket	1
7	EN1-12	Inlet Manifold	1
8	EN1-10	Carburetor side Gasket	1
9	EN1-11	Screw M5x20	4
46	HT1-46	Carburetor Assembly	1
Flywheel Cover Components			
9	EN1-11	Screw M5X 20	4
21	HT1-21	Flywheel Cover	1
Clutch Components			
24	EN1-17	Clutch Step Screw	2
25	EN1-18	Clutch Washer	2
26	EN1-19	Clutch Assembly	1
27	HT1-27	Clutch Shoe Carrier	1
28	EN1-22	Flat Washer	2
29	HT1-29	Nut M8x1	1
30	EN1-28	Screw M5X25	4
Ignition Coil Components			
19	EN1-25	High Voltage Wire	1

Item	Part No	Description	Qty
22	EN1-26	Ignition Coil	1
62	HT1-62	Spark Plug Boot	1
Flywheel			
23	HT1-23	Flywheel	1
Crankcase Components			
3	EN1-30	Washer	1
4	EN1-29	Washer Spring	1
30	EN1-28	Screw M5X25	1
13	EN1-32	Guide Plate	1
20	EN1-14	Pin B3 x 10	4
31	EN1-31	Front Half Crankcase	1
32	EN1-37	Rear Half Crankcase	1
33	EN1-33	Crankcase Gasket	1
34	EN1-34	Oil Seal 12X22X7	2
35	EN1-35	Ball Bearing 6001/P5	2
36	EN1-57	Crankhaft / Flywheel Key	1
43	EN1-36	Crankshaft / Conrod Assembly	1
61	EN1-15	Guide Plate Screw M4x16	1
Start Pawl Components			
44	HT1-44	Start Pawl Assembly	1
Starter Components			
45	HT1-45	Starter Assembly	1
61	EN1-15	Screw M4 X16	4
Fuel Tank Components			
52	EN1-62	Fuel Cap assembly	1
53	HT1-53	Fuel Tank	1
54	EN1-70	Washer 5	3
55	HT1-55	Screw M5x20	1

Item	Part No	Description	Qty
56	HT1-56	Screw M5x16	2
57	EN1-73	Fuel Tank Filter	1
58	EN1-74	Fuel Tank Grommet	1
59	HT1-59	Return Fuel Line	1
60	HT1-60	Fuel Line	1
Spark Plug			
18	EN1-48	Spark Plug	1
Engine Cover Components			
14	EN1-43	Screw M5X14	1
15	EN1-44	Cover	1
16	EN1-45	Engine Cover	1
17	EN1-46	Screw M4X12	1
Muffler Components			
10	EN1-51	Muffler	1
11	EN1-52	Screw M5x55	2
12	EN1-50	Muffler Gasket	1
Engine Cylinder Components			
5	EN1-49	Cylinder Bolts M5x20	4
4	EN1-29	Washer Spring	4
3	EN1-30	Washer	4
1	EN1-53	Cylinder	1
2	EN1-54	Cylinder Base Gasket	1
37	EN1-55	Piston Rings / Set	2
38	EN1-56	Piston	1
39	EN1-60	Gudgon Pin Bearing	1
40	EN1-59	Gudgon Pin	1
41	EN1-58	Stop Ring	2
42	EN1-61	Gudgon Pin Circlip	1

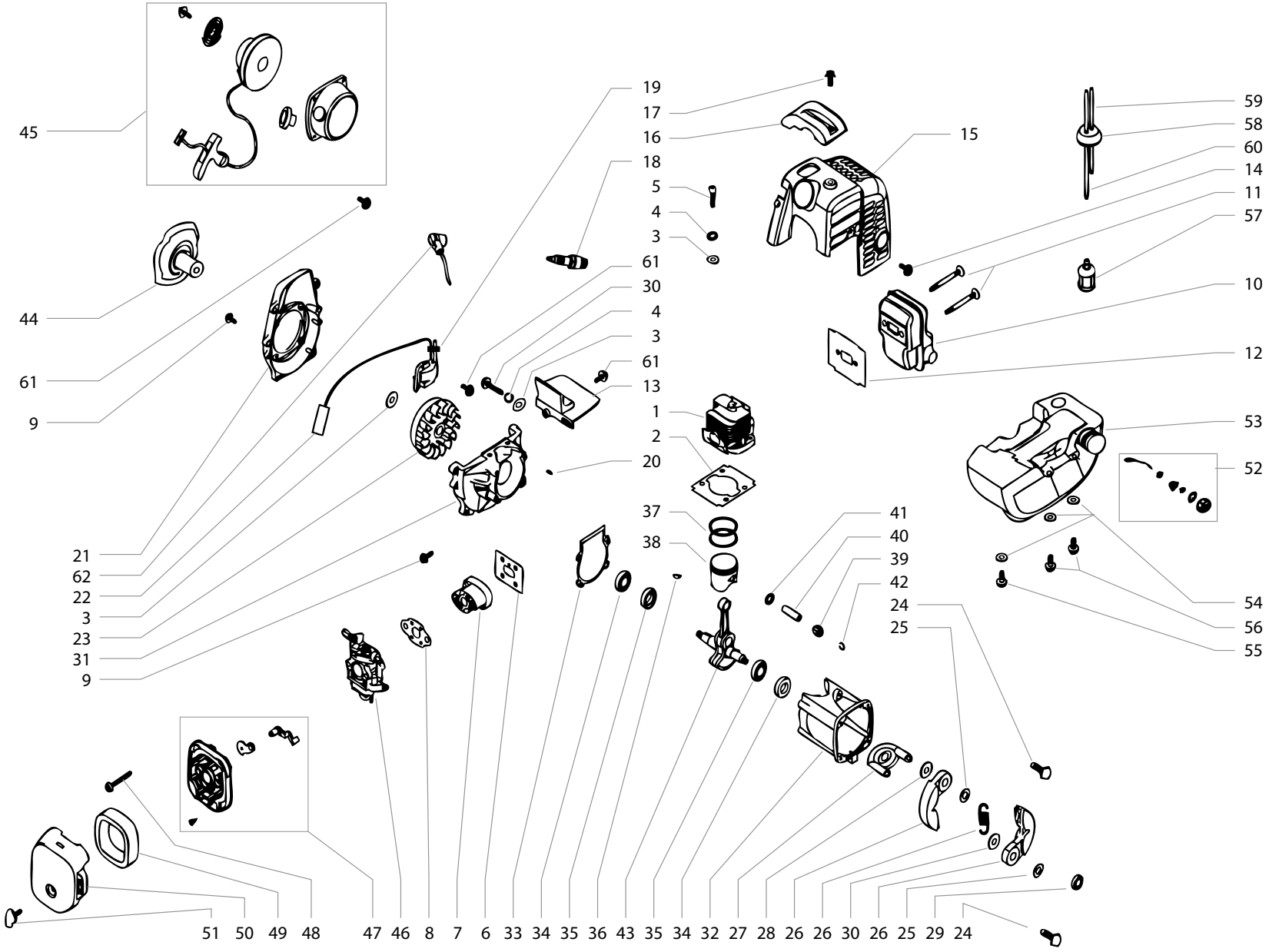
45
44
61
9
21
62
22
3
23
31
9
19
17
16
18
5
4
3
61
30
4
3
61
13
1
2
20
37
38
15
59
58
60
14
11
57
10
12
53
52
41
40
39
42
24
25
54
56
55
51 50 49 48
47 46 8 7 6 33 34 35 36 43 35 34 32 27 28 26 26 30 26 25 29 24

SANLI

GENUINE SPARE PARTS